REHAU®
Unlimited Polymer Solutions

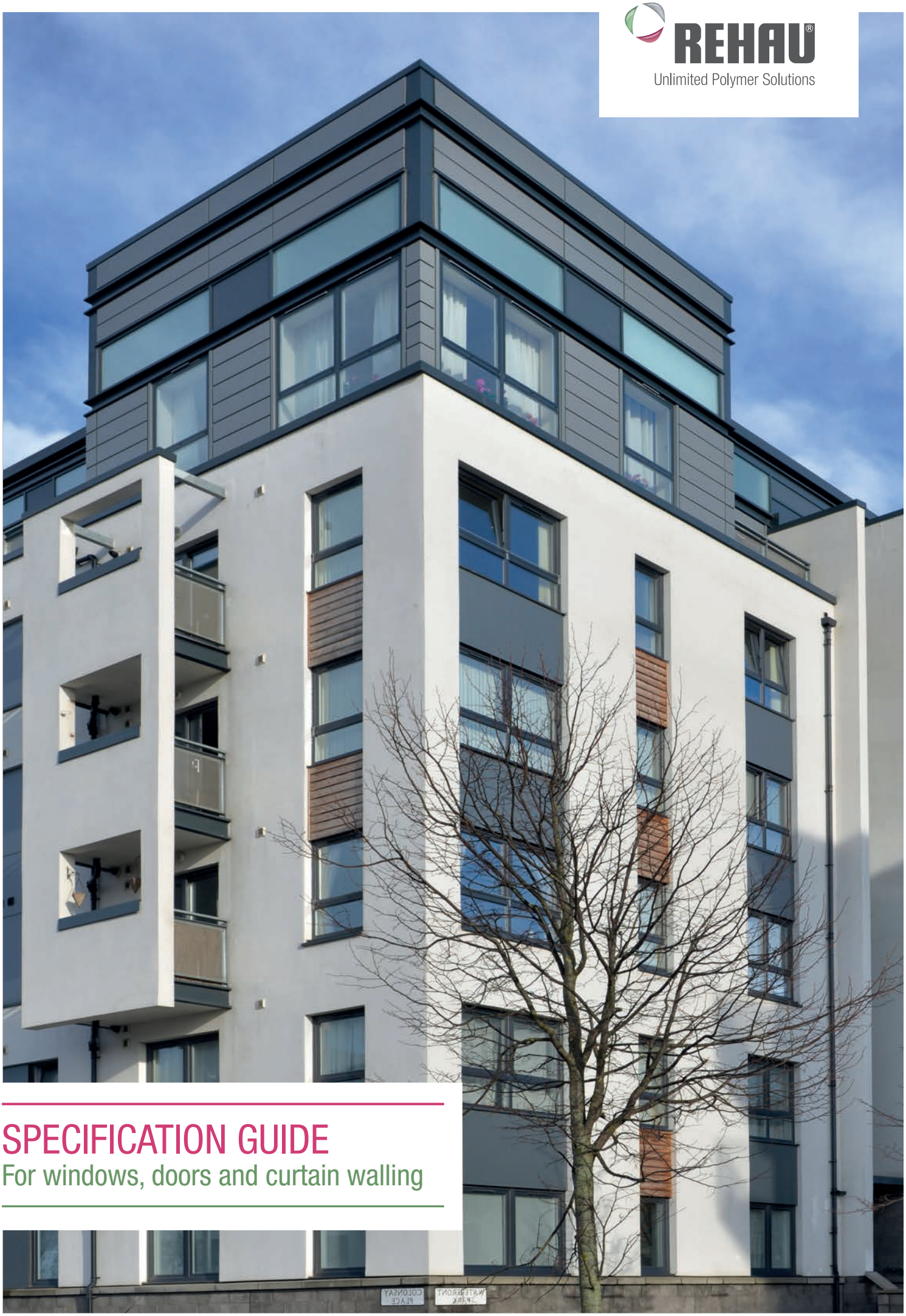

SPECIFICATION GUIDE

For windows, doors and curtain walling

SPECIFICATION GUIDE
Contents

Category	System	Page
Windows		
Casement Windows	- TOTAL70	4-7
Flush Fit Windows	- RIO	8 -11
Fire Rated Windows	- RAUFERNO	12 -15
Fully Reversible Windows	- TOTAL70	16 -19
Tilt & Turn Windows	- TOTAL70	20 -23
Tilt & Turn Windows	- GENEO & GENEO ALUTOP	24-27
Vertical Sliding Windows	- Heritage	28 - 31
Doors		
Composite Doors	- AGILA	32 - 35
Entrance Doors	- TOTAL70	36 - 39
French Doors	- TOTAL70	40 - 43
Sliding Doors	- AGILA	44 - 47
Multi-Fold Doors	- AGILA	48 - 51
Curtain Walling		
Alu Clad Curtain Walling	- Polytec 50	52 - 55
Colour		56 - 57
Accreditations		58 - 59
Building Solutions		60 - 61
Plastics in Circulation		62 - 63
Sustainability		64 - 65
Discovery Knowledge		66 - 67
Discover the REHAU Hub		68 - 69

CASEMENT WINDOWS
TOTAL70

REHAU PVCu Casement Windows offer a comprehensive range of window styles, suitable for all types of buildings. All offer exceptional levels of energy efficiency as well as a choice of aesthetics.

Characteristics

The REHAU TOTAL70 window system comprises a range of multi-chambered profiles that are designed to meet the requirements of the new build, commercial and domestic refurbishment markets.

Within the system there is a choice of profile designs. REHAU TOTAL70c is a chamfered system resembling a traditional 'putty line' finish. The chamfered system is simple yet elegant, helping to create our beautiful contemporary frames.

REHAU TOTAL70s is a suite of fully sculptured profiles offering heightened style to both modern and traditional properties.

The two systems are fully compatible and supported with a full range of ancillary profiles for all installation requirements.

Both designs are available in a range of foil laminate options for complete personalised profile design. Our complete range of foil laminate options can be seen on our colour page or the REHAU Colour Brochure.

TOTAL70 window systems can achieve an A rating, the highest possible Window Energy Rating for thermal efficiency. REHAU TOTAL70 can achieve U-Values of 0.8 W/m^{2}K using triple glazed Argon sealed units allowing for specification in Passivhaus standard buildings. REHAU TOTAL70 windows and doors will comply with and exceed regional building regulations ensuring a 'future proof' solution.

The TOTAL70C system is available with a co-extruded profile made up of 75% post-consumer waste and boasts severe weather performance credentials and unparalleled technical, thermal and noise reduction efficiency.

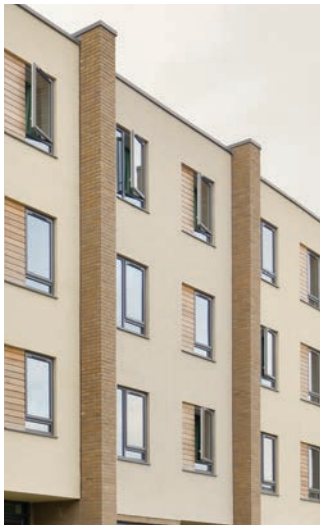

Exceptional levels of energy efficiency as well as a choice of aesthetics.

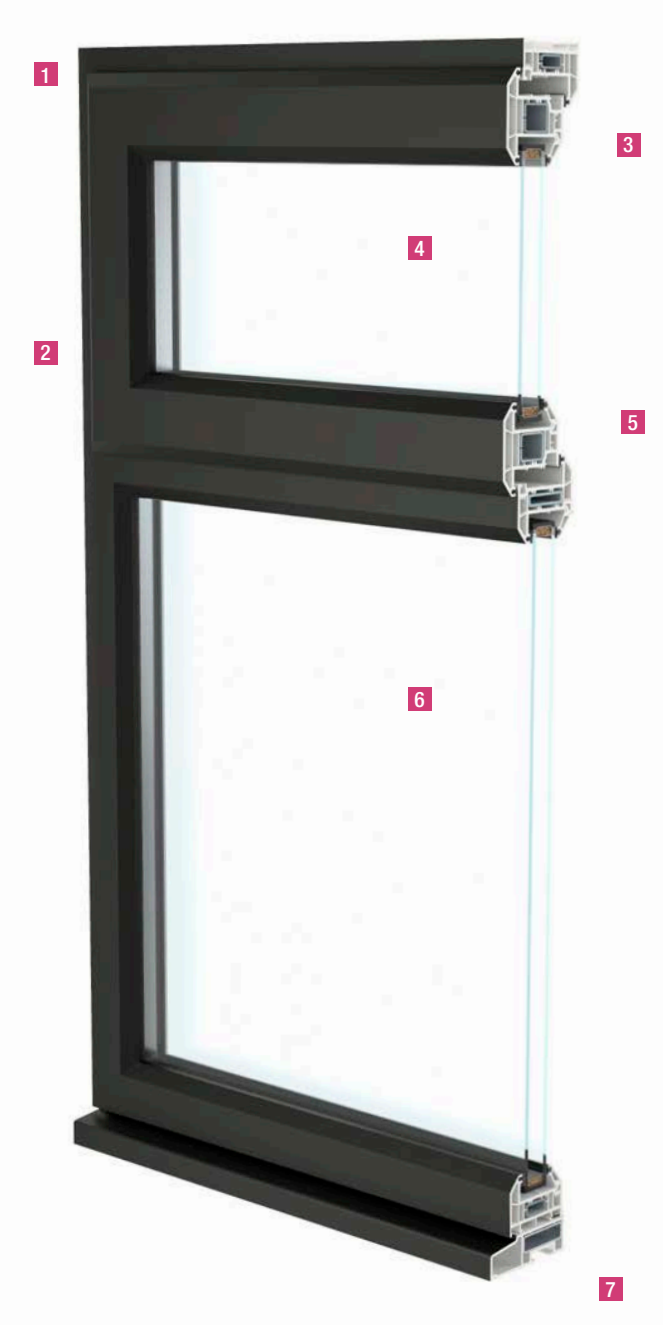

REHAU TOTAL70c Casement Window (Chamfered)

1. Larger reinforcement chambers allow for additional strength / rigidity when necessary
2. Optional features include a part sculptured T Sash
3. Ideal replacement for British timber Casement Windows due to 70mm depth
4. 4mm to 44mm double or triple glazing
5. Wide range of styles and combinations eg. French, Bay and Bow windows
6. Can achieve U-Values of 0.8 W/m²K using the triple glazed Argon sealed units.
7. Complies with Building Regulations

Feature	Specification
Profile depth	70mm
Maximum window size	900 x 1500 (Side Hung) 1200 x 1200 (Top Hung)
Thermal performance	0.8 W/m²K
Max. sash weight	40kg
Glass width	4 – 44mm
Accreditations	See page 54

CASEMENT WINDOWS
TOTAL70

Vertical Section (Chamfered)

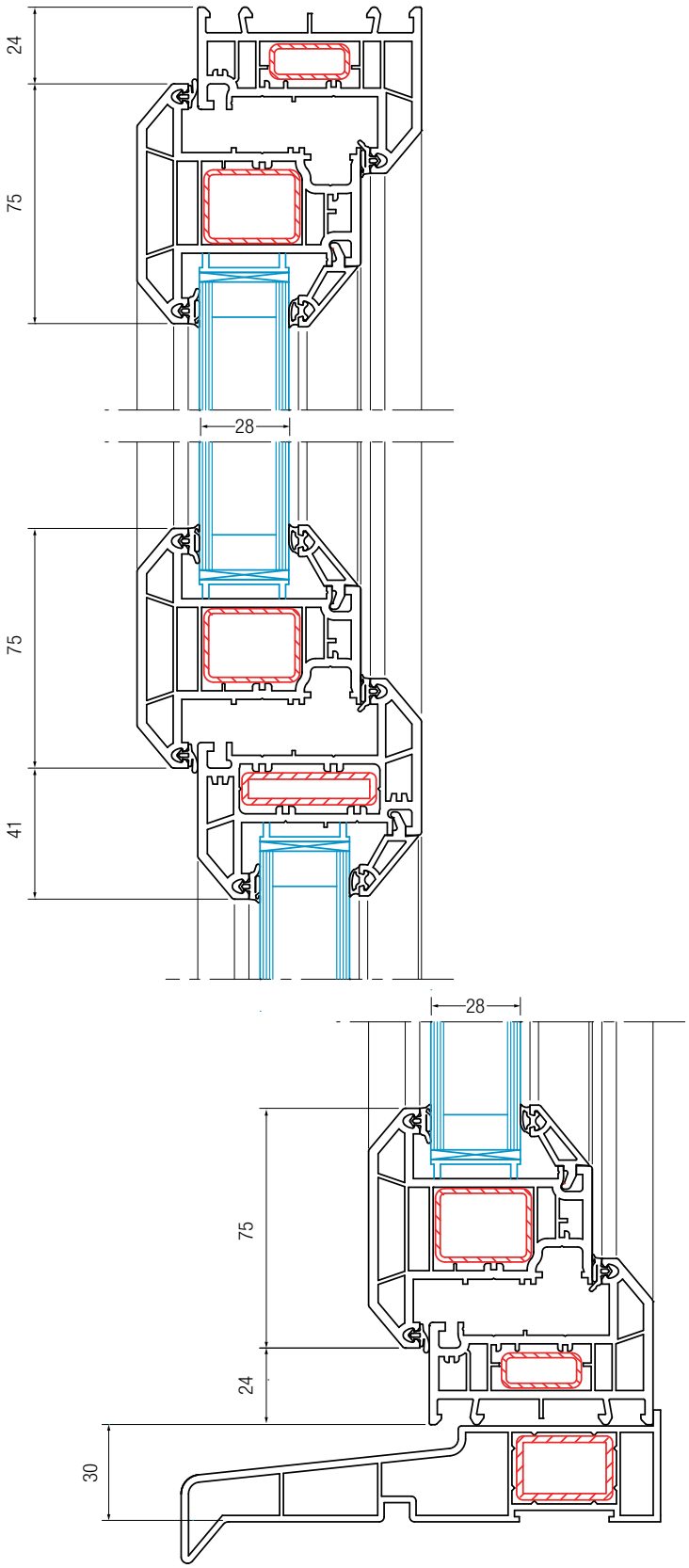

DETAILED DRAWINGS ARE AVAILABLE ON REQUEST

Vertical Section (Sculptured)

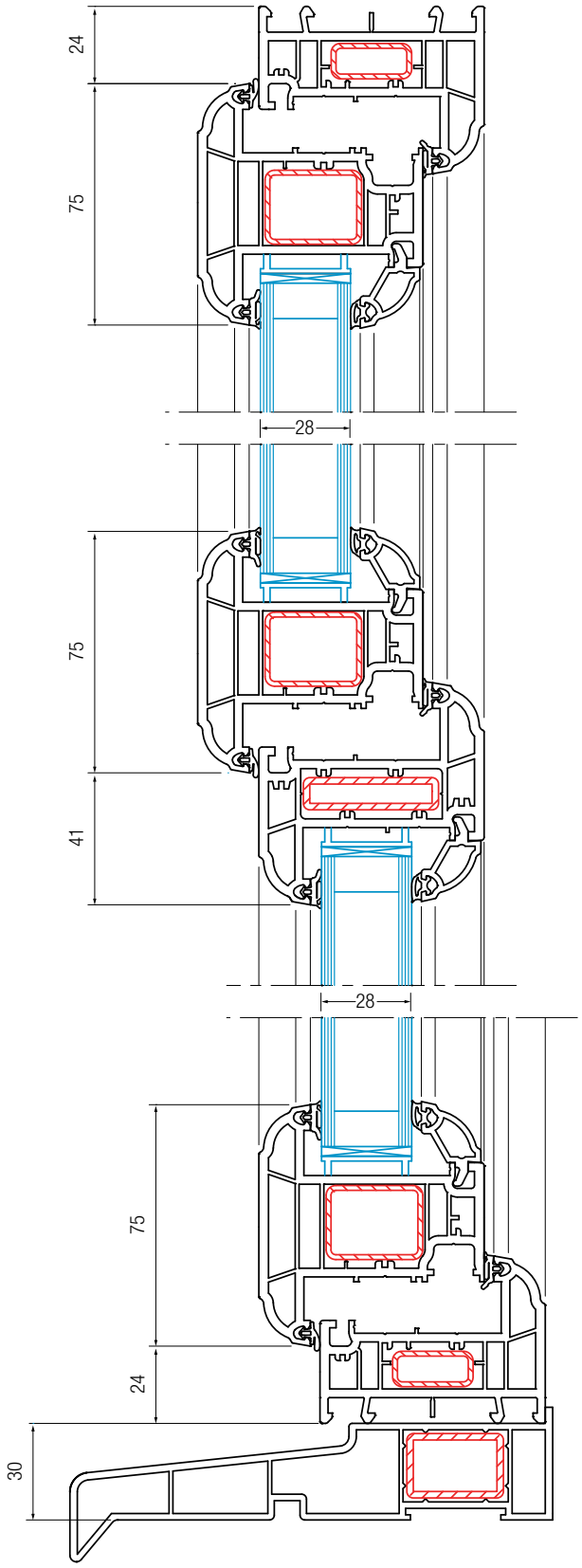

REHAU TOTAL70s Casement Window (Sculptured)

1 Interchangeable profiles allow for multiple style combinations to be manufactured

2 Fully sculptured detail for enhanced style to both modern and traditional properties

3 Optional features include run through sash horn, clip-on Georgian bars and various glazing bead style options

4 Various combinations of fixed and opening sections make this window extremely versatile

DETAILED DRAWINGS ARE AVAILABLE ON REQUEST

FLUSH FIT WINDOWS
Rio

The REHAU Rio Flush Fit window combines the realistic look and feel of timber, with all the benefits of uPVC.

Characteristics

The Rio Flush Fit is all about offering the customer more choice with little extra work required from the installer. However, as any good window professional knows, the details within the sashes are crucial to the finished product.

The Rio Flush Fit system allows manufacturers and installers to replicate the details of a traditional timber flush fit window in the most authentic way possible.

This is achieved through the three jointing solutions that provide different aesthetics to suit any style of property:

Full Weld Joint
The same as a standard casement window offering the most cost effective option

Full Mechanical Joint
The most realistic timber flush fit window appearance for ultimate authenticity

Mechanical/Weld Joint (MechWeld)
Offering the appearance of mechanical-style timber joints on the outside with a fully welded detail inside

The TOTAL70 compatibility factor truly enables installers to 'fit and forget' due to familiarity and ease of installation. Rio Flush Fit is a high-quality product, achieving excellent weather performance credentials along with PAS24 security accreditation.

Available in both chamfered and sculptured frame options from the TOTAL70 range, Rio can suit any installation and both designs are available with the option of 20 colour combinations as standard for a true personalised product. Rio also has the potential to incorporate a grey base with its foiled both sides grey combinations. The Rio Flush Fit French window has a hidden dummy mullion end cap that is over moulded with a gasket for a seamless finish.

The detailed external chamfer on the sash allows for softer aesthetics and is in line with the REHAU Heritage Vertical Slider. It also utilises the Heritage bead for a low-level sight line. REHAU Heritage Georgian bars can be used to provide a chamfered finish outside and sculpture inside for that traditional look.

Our latest innovation to the Rio flush fit range is the new deep bottom rail which combines the period-style visuals of timber sash windows. The Deep Bottom Rail can be mechanically jointed on the bottom of the sash with a screwported aluminium component to create an authentic look.

The Rio Flush Fit system allows manufacturers and installers to replicate the details of a traditional timber flush fit window in the most authentic way possible.

FLUSH FIT WINDOWS
Rio

1 Same Eurogroove position as TOTAL70

2 28mm Glazing as standard with option for 34mm Triple Glazing

3 Ideal replacement for British timber casement windows due to 70mm depth

4 Three jointing options: Mechanical Joint, Fully Welded & Mech Weld

5 Exceeds weather performance standards as well as PAS24 accreditation

6 TOTAL70 frame detail

Feature	Specification
Profile depth	70mm
Maximum sash size	1200 x 1200mm (top hung) 900 x 1300 (side hung)
Thermal performance	1.3 W/m^2K
Max. sash weight	35kg (Fully Welded) 30kg (Mechanical Joint)
Glass Width	28mm & 34mm
Accreditations	See page 58

Vertical Section

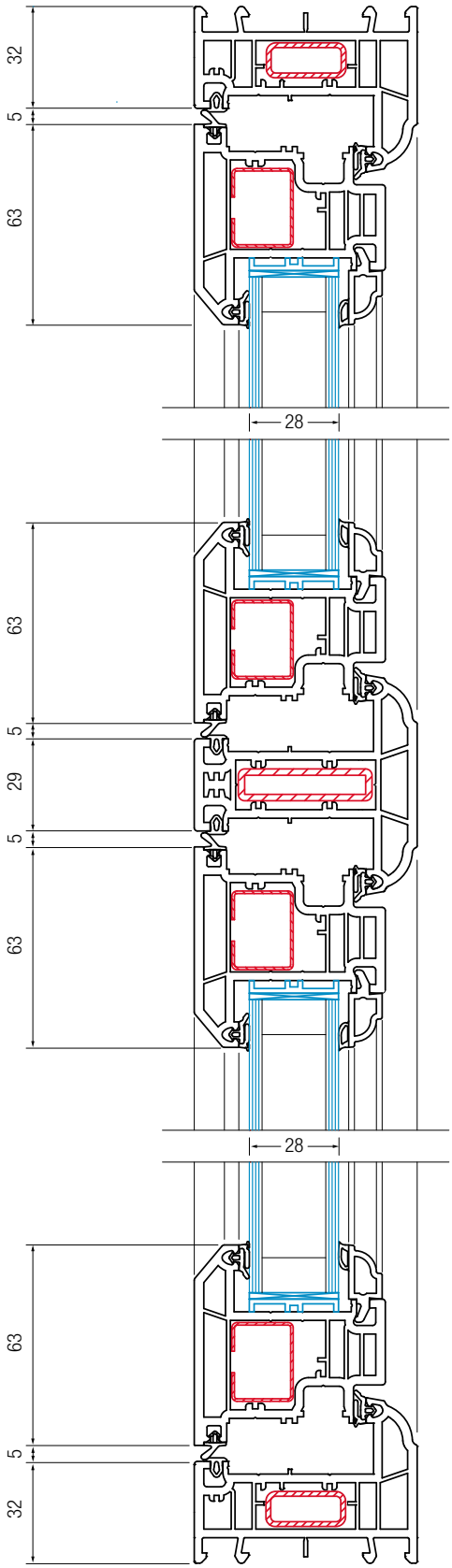

DETAILED DRAWINGS ARE AVAILABLE ON REQUEST

FIRE RATED WINDOWS
RAUFERNO

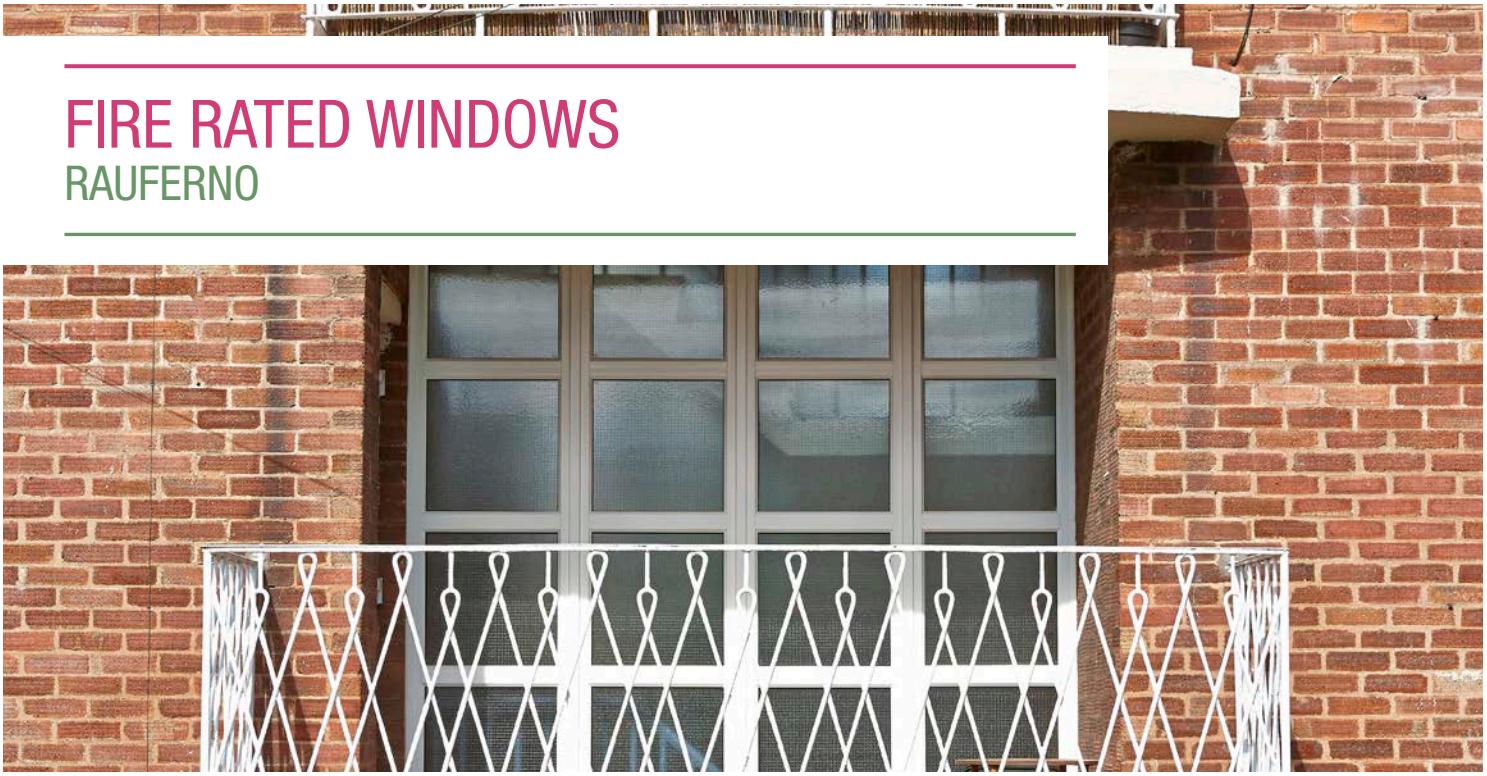

Not restricted by traditional fire rated materials and construction techniques, the RAUFERNO Fire Resistant Window gives you the freedom to use a PVC-U fire resistant system and still comply fully with 2010 Building Regulations for most protected areas, having completed full test scope BS476 Parts 20 and 22.

Characteristics

Fire rated windows from REHAU provide a design option for you to install throughout a building using fixed windows only.

The system uses intumescent strips, which expand with heat to create a barrier, utilising the reinforcement and fire retardant glass panel for at least a 30-minute fire rating.

RAUFERNO provides you with all the safety and security of traditional fire rated products but with PVCu's inherent benefits of improved thermal insulation, sound proofing, excellent security options and low maintenance.

Our fixed light windows have been tested to BS476 Part 20/22.

Fixed Light Testing (Integrity Glass) - single direction only

- BS 476: Part 22 1987 – clauses 6 and 7 (30 minutes)
- Warrington Fire assessment report no. C81844

Fixed Light Testing (Insulated Glass) - single direction only

- BS 476: Part 22 1987 – 30 minute assessment
- Warrington Fire Report No 185641

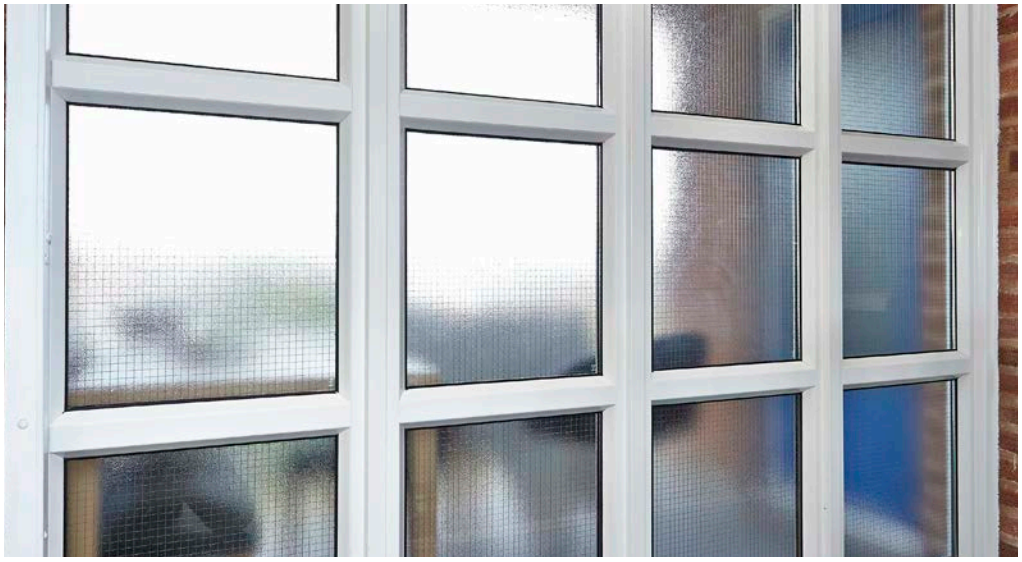

REHAU RAUFERNO PVCu fire resistant windows, a patented industry first.

246

FIRE RATED WINDOWS
RAUFERNO

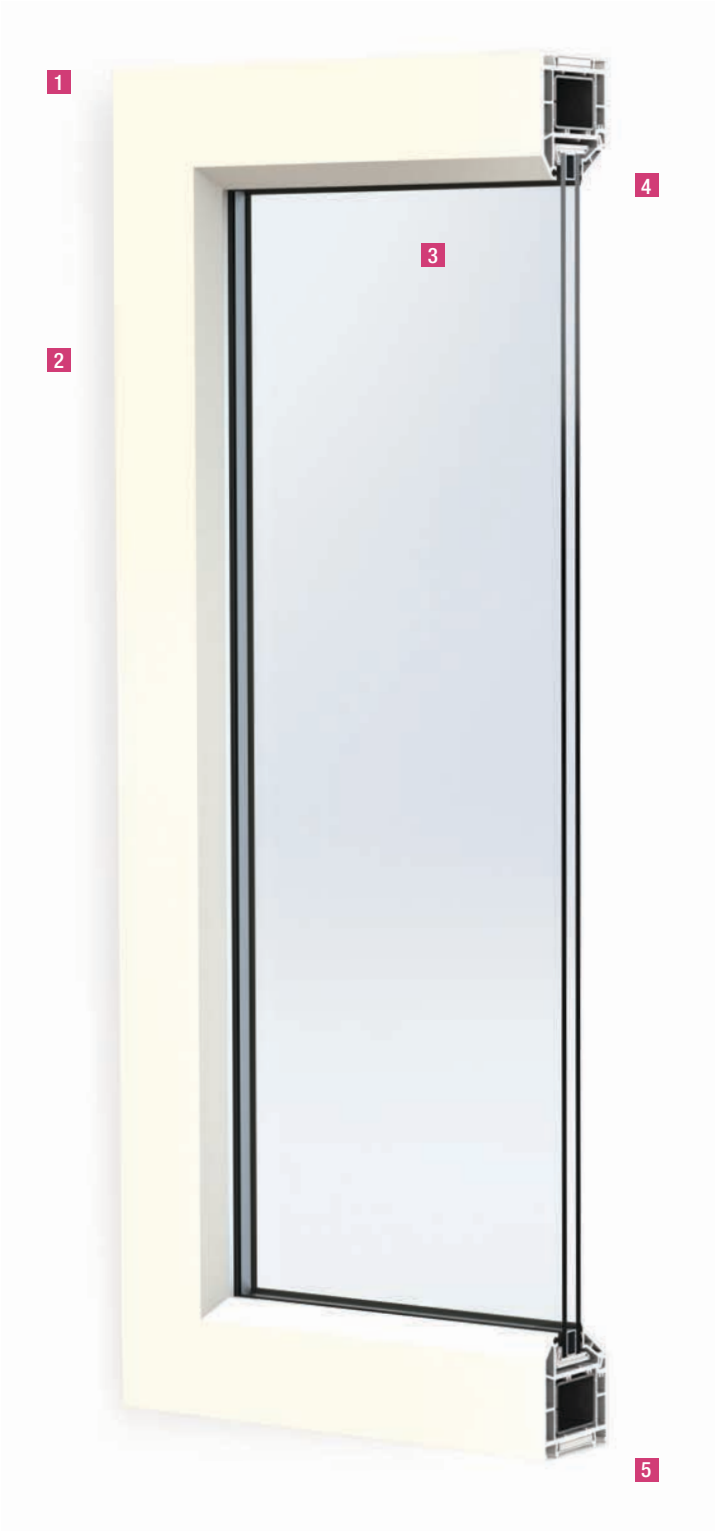

1 Fixed light system

2 70mm frame depth

3 20mm Glazing

4 Intumescent strips which expand with heat to create a barrier

5 Tested to BS476 Part20/22

Feature	Specification
Profile depth	70mm
Maximum sealed unit size	1200 x 1200mm Max Area. 1.44m^2 (52mm Frame Only) 600 x 1486mm Max Area. 0.89m^2 (72mm Frame with Transom)
Thermal performance	1.4 W/m^{2}K
Glass width	20mm
Accreditations	See page 58

Vertical Section

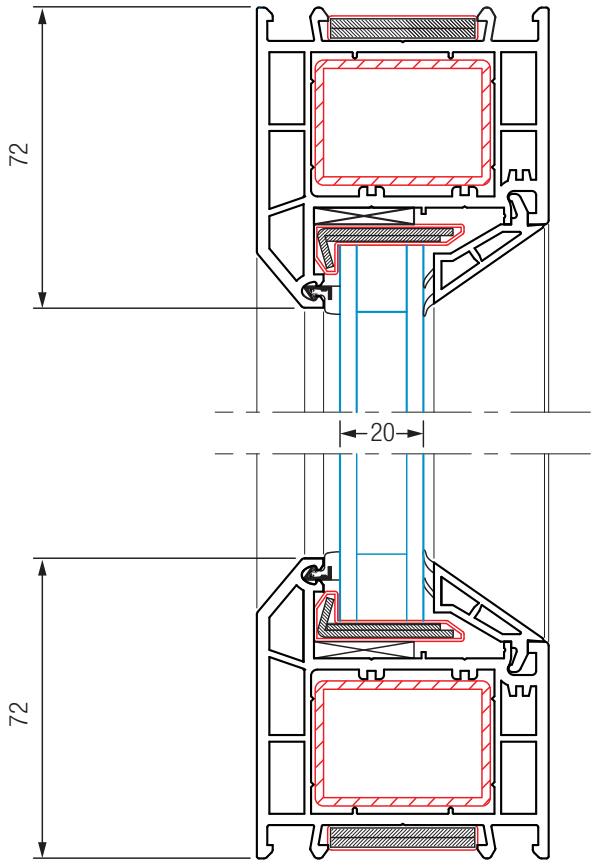

DETAILED DRAWINGS ARE AVAILABLE ON REQUEST

FULLY REVERSIBLE WINDOWS
TOTAL70

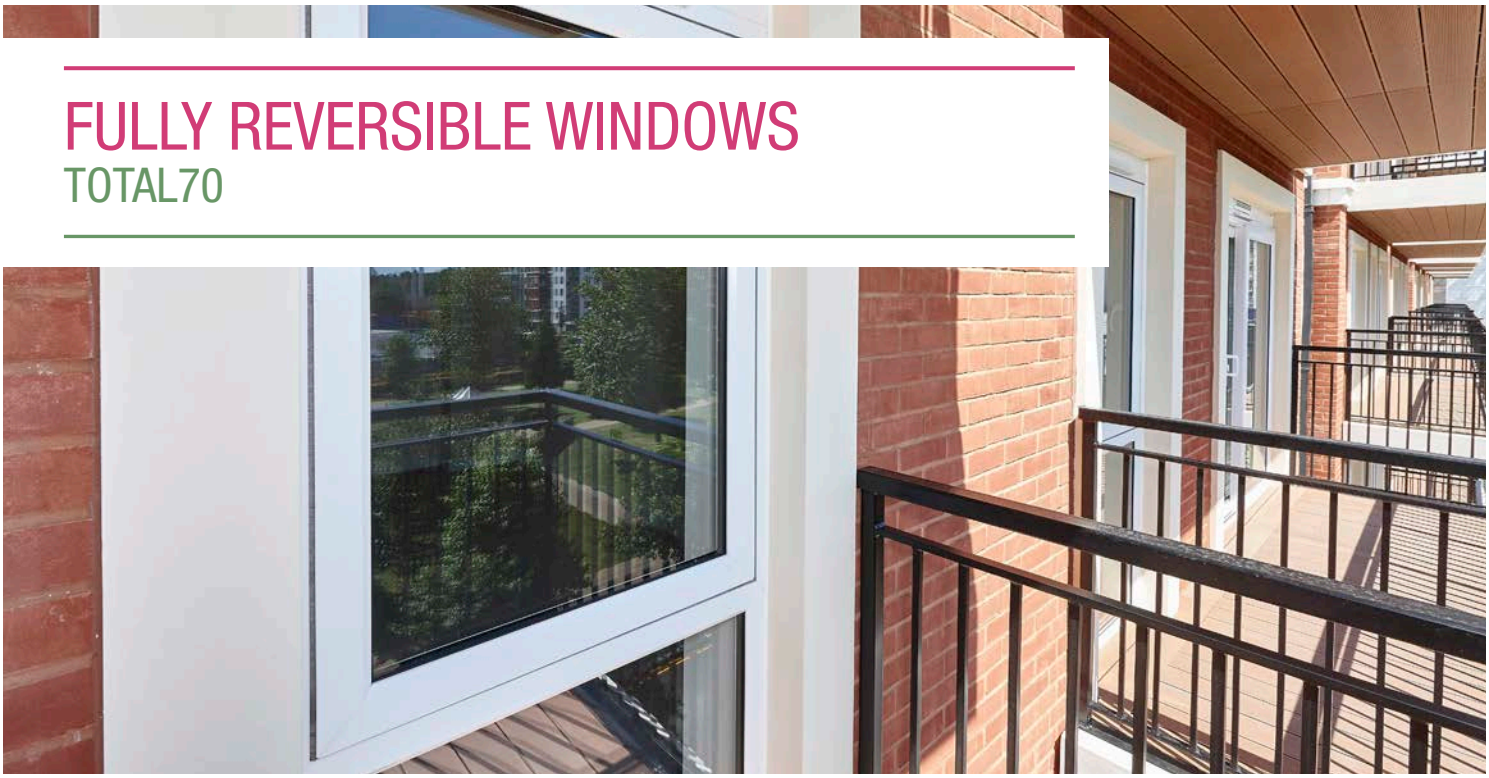

Our PVCu Reversible Windows give a contemporary appearance to any building and are designed to maximise natural light. Their unique full rotation reversible action allows for a high level of ventilation as well as easy maintenance, where the external face can be cleaned from the inside of the room.

Characteristics

The reversible window system (TOTAL70R) has been designed with a square edge on external sections of the frame to create slimmer sightlines for a sleeker aesthetic.

A range of combinations are available including top turn or side turn with the option of fixed lights available using a dedicated transom/mullion. It is also fully compatible with the TOTAL70 ancillary range.

The system also fully complies with the requirements of the building regulations covering Conservation of Fuel and Power Part L (England and Wales) and Part J (Scotland) when glazed using the correct type of sealed unit.

TOTAL70R is available in a range of foil laminate options allowing for complete personalised profile design. Our complete range of foil laminate options can be seen on our colour page or the REHAU Colour Brochure.

Their unique full rotation reversible action allows for a high level of ventilation as well as easy maintenance, where the external face can be cleaned from the inside of the room.

FULLY REVERSIBLE WINDOWS
TOTAL70

1. Square edges on external sections of the frame to create slimmer sightlines
2. Reversible window gives a contemporary appearance to any building and is designed to create maximum light
3. 180° degrees reversible action to allow cleaning from the inside of the room
4. High level of natural ventilation
5. Easy maintenance

Feature	Specification
Profile depth	70mm
Maximum window size	1400 x 1400mm
Thermal performance	1.0 W/m²K
Max. sash weight	60kg
Glass width	Up to 44mm
Accreditations	See page 58

Vertical Section

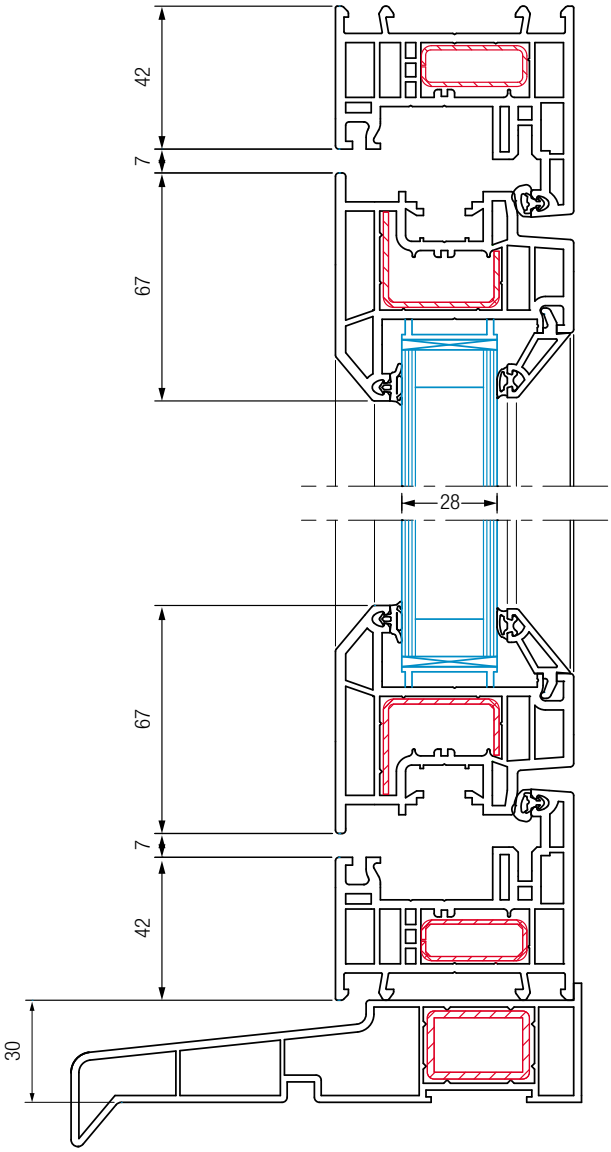

DETAILED DRAWINGS ARE AVAILABLE ON REQUEST

TILT & TURN WINDOWS
TOTAL70

REHAU PVCu Tilt & Turn Windows allow maximum opening widths with the option of a full or limited amount of ventilation. With the Tilt & Turn opening system, this stylish PVCu window can be tilted inwards from the top for normal ventilation or can be fully opened from the side for full ventilation. This also allows for easy cleaning and maintenance.

Characteristics

A choice of chamfered profiles are available using TOTAL70c or fully sculptured using TOTAL70s; both systems offer slim sightlines and enhanced aesthetic appeal.

Inward opening configurations for an effective fire escape and easy cleaning are ideal where there is restricted external space for outward opening configurations.

A 16mm integrated Eurogroove allows for a maximum choice of standard fittings including the tilt before turn option, as well as restrictors.

Both systems are available in a range of foil laminate options allowing for complete personalised profile design. Our complete range of foil laminate options can be seen on our colour page or the REHAU Colour Brochure.

With the tilt & turn opening system, this stylish PVCu window can be tilted inwards from the top for normal ventilation or can be fully opened from the side for full ventilation.

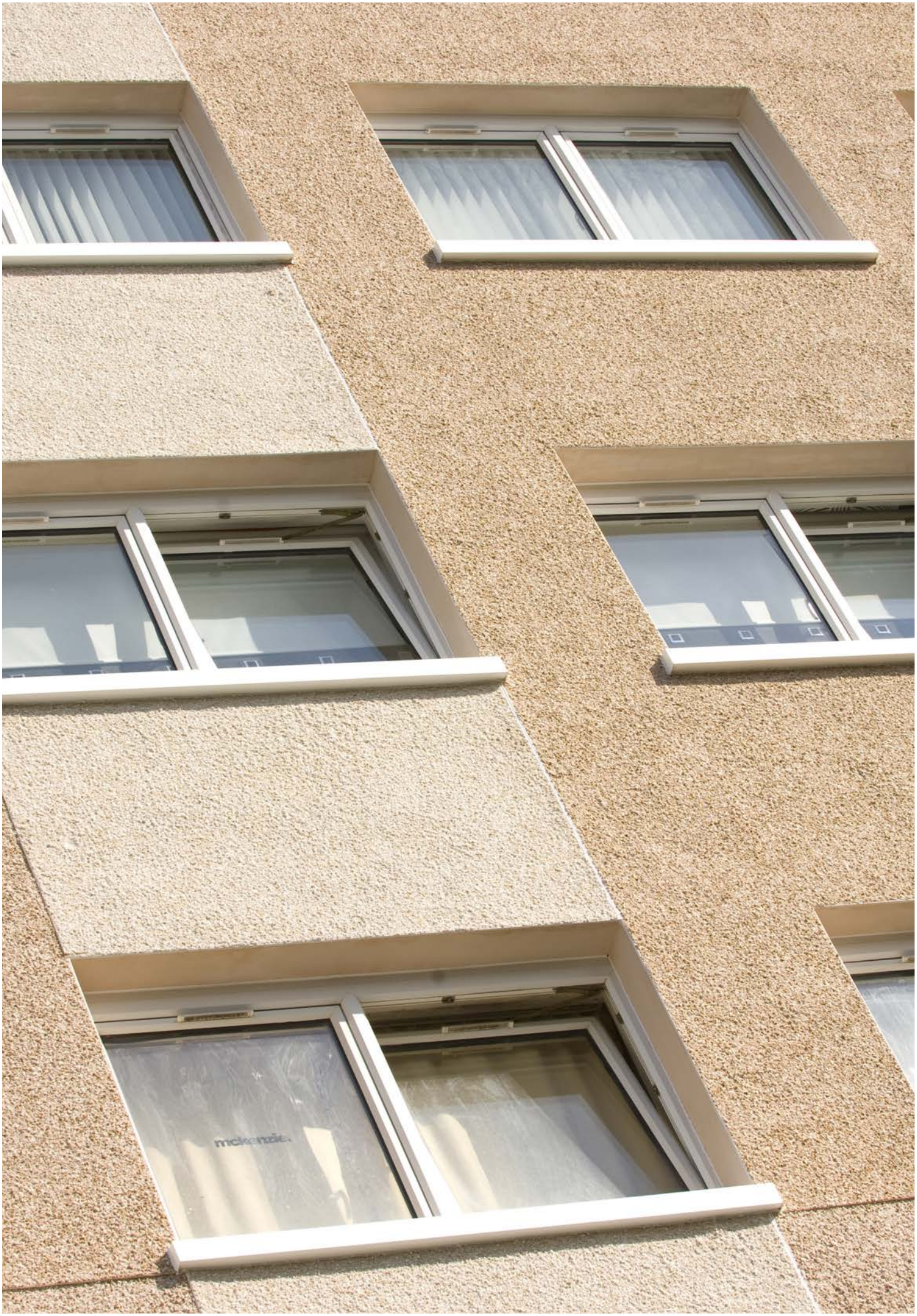
mckenzie.

TILT & TURN WINDOWS
TOTAL70

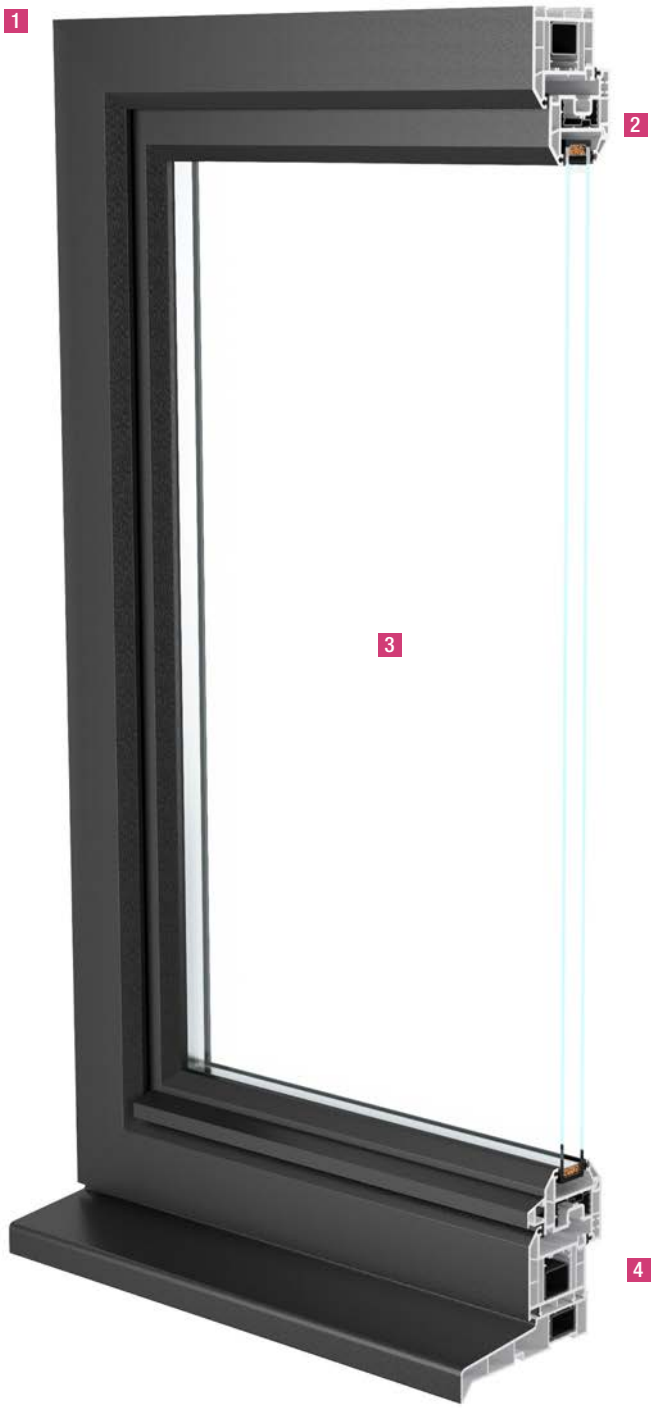

1. 16mm integrated Eurogroove allowing for hardware options
2. Can tilt for minor ventilation or turn and open to feel the full benefits
3. Inward opening for effective fire escape and where restricted outside space makes outward opening hazardous
4. Slimmer sightlines for enhanced aesthetic appeal

Feature	Specification
Profile depth	70mm
Maximum window size	1288 x 1588mm
Thermal performance	Exceeds 1.0 W/m²K
Max. sash weight	60kg
Glass width	Up to 44mm
Accreditations	See page 58

Vertical Section

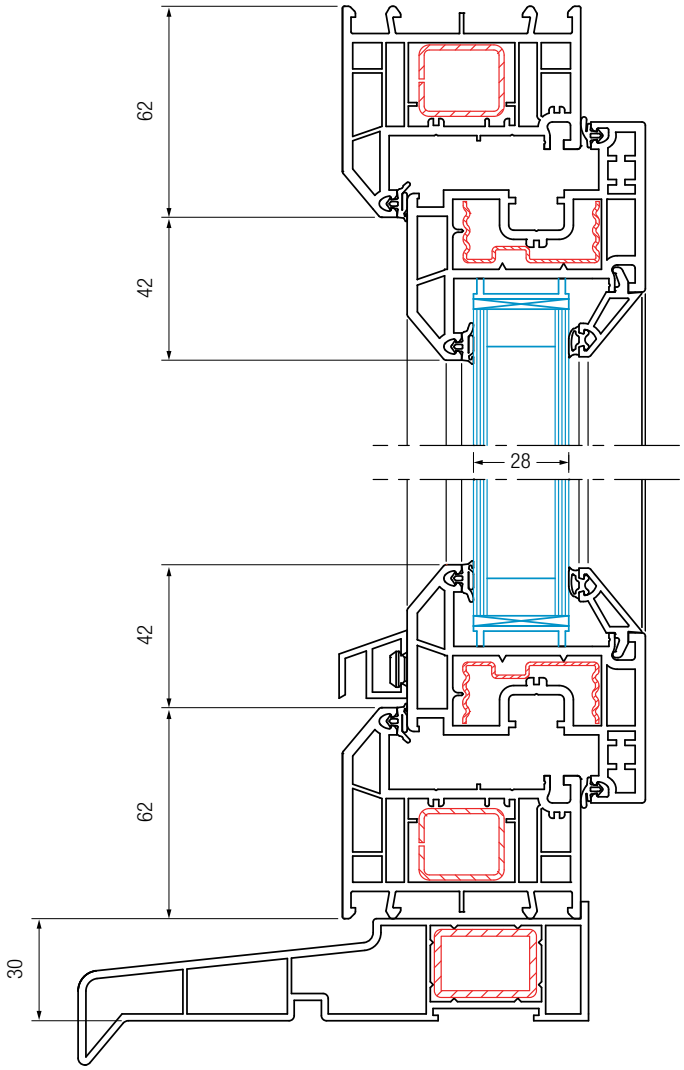

DETAILED DRAWINGS ARE AVAILABLE ON REQUEST

TILT & TURN WINDOWS
GENEO & GENEO ALUTOP

GENEO is a Tilt & Turn fibre composite window and door system made from RAU-FIPRO X – an innovative material originally developed for aircraft construction and the auto industry. Lightweight but with high stability and torsional stiffness, less reinforcement is required when installing these windows, saving time and money offering high thermal performance (U-value of 0.76 W/m^{2}K is achievable).

Characteristics

The high level of thermal performance with six chambers and three seals provides the best possible level of sound insulation (to 47 dB), as well as excellent security protection. The first 'self-reinforced' window and door profile giving large element sizes for maximum solar gain and contemporary architecture. Available in a large range of foil laminate options as well as standard white, the product certainly stands out from the crowd.

GENEO AluTop

Robust and weather resistant, GENEO AluTop is an aluminium profile that clicks into place over the top of GENEO external profiles giving modern aluminium aesthetics. The high energy efficiency of RAU-FIPRO for strength performance is still maintained plus a wide range of RAL colours are available.

Lightweight but with high stability and torsional stiffness, less reinforcement is required when installing these windows, saving time and money.

TILT & TURN WINDOWS
GENEO & GENEO ALUTOP

1 RAUFIPRO high-tech composite material

2 Clip on Alutop system

3 Larger frame sizes

4 Passivhaus certified

5 Exceptional acoustic performance

Feature	Specification
Profile depth	86mm / 6 Chambers
Maximum window size	2600 x 1500mm (RAU-FIPRO X)
Thermal performance	0.66 W/m²K with triple glazing
Max. sash weight	Up to 100kg (wet glazed) Up to 80kg (dry glazed)
Glass width	Up to 53mm
Accreditations	PAS24 compliant

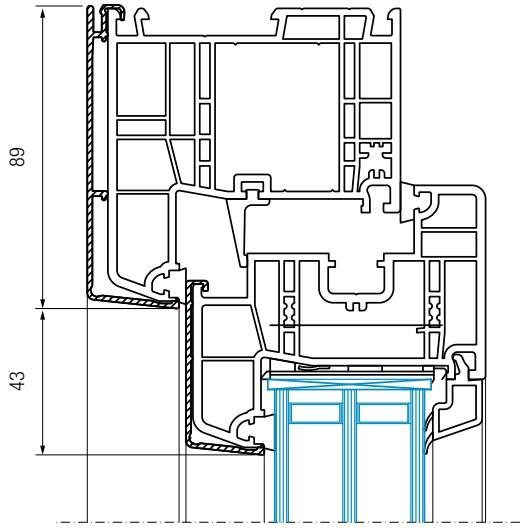

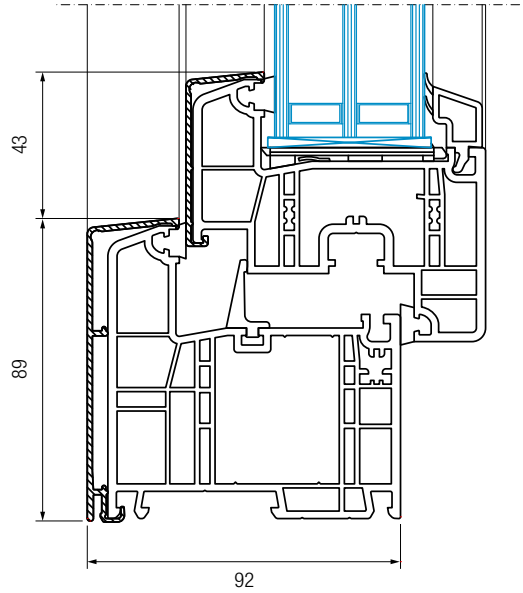

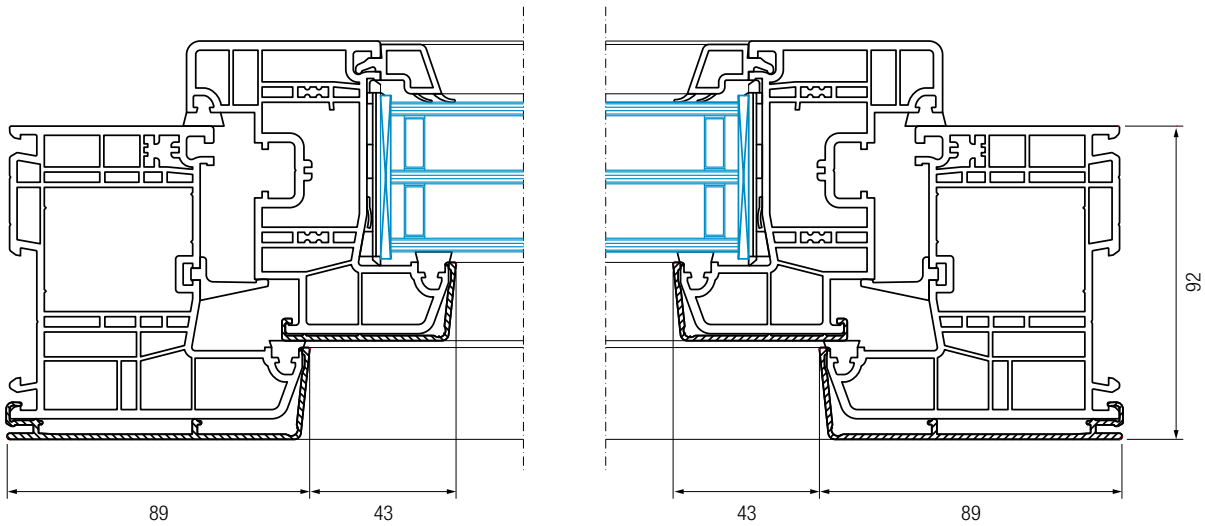

DETAILED DRAWINGS ARE AVAILABLE ON REQUEST

VERTICAL SLIDING WINDOWS
Heritage

The REHAU Heritage Vertical Slider with traditional timber sash window aesthetics has been approved for use in conservation areas around the UK.
Ideal for energy efficient replacement windows in Victorian, Georgian and Edwardian buildings as well as for use in traditional style new build.

Characteristics
The Heritage system's deep bottom rail has been designed to replicate the aesthetics of a traditional timber window and can be used with either a slim-intermediate sash combination or intermediate-large sash combination.

The system has two sashes built into the frame which slide in opposing directions and will remain in any position.

The window has been designed to tilt inwards to enable the window to be cleaned from the inside of the property for easy, fast and safe cleaning and maintenance.

The Heritage vertical slider can achieve an A rating for energy efficiency and complies with the requirements of the building regulations Part L (England and Wales) and Part J (Scotland) when glazed using the correct glazing option. The issue of draughts with timber sash windows is negated with the REHAU Heritage vertical slider; triple brush seals are incorporated into the innovative system, creating a highly effective method of draught proofing.

The REHAU Heritage vertical sliding system is available in a range of foil laminate options allowing for complete personalised profile design. Our complete range of foil laminate options can be seen on our colour page or the REHAU Colour Brochure.

Approved for use in conservation areas around the UK.

1 24mm & 28mm glazing options

2 Triple brush seals in the frame create a barrier against wind and air

3 4 Sash options

4 Georgian bars for an authentic appearance

5 Standard balances of 14mm or up to 19mm diameter can be used

6 Optional deep bottom rail profile

Feature	Specification
Profile depth	137mm
Maximum window size	1800 x 3500mm
Thermal performance	Exceeds 1.1 W/m²K
Max. sash weight	50kg
Glass width	24 & 28mm
Further options	Georgian bars Fixed or run through sash horns Sliding latches allowing for tilting
Accreditations	See page 54

VERTICAL SLIDING WINDOWS
Heritage

Vertical Section

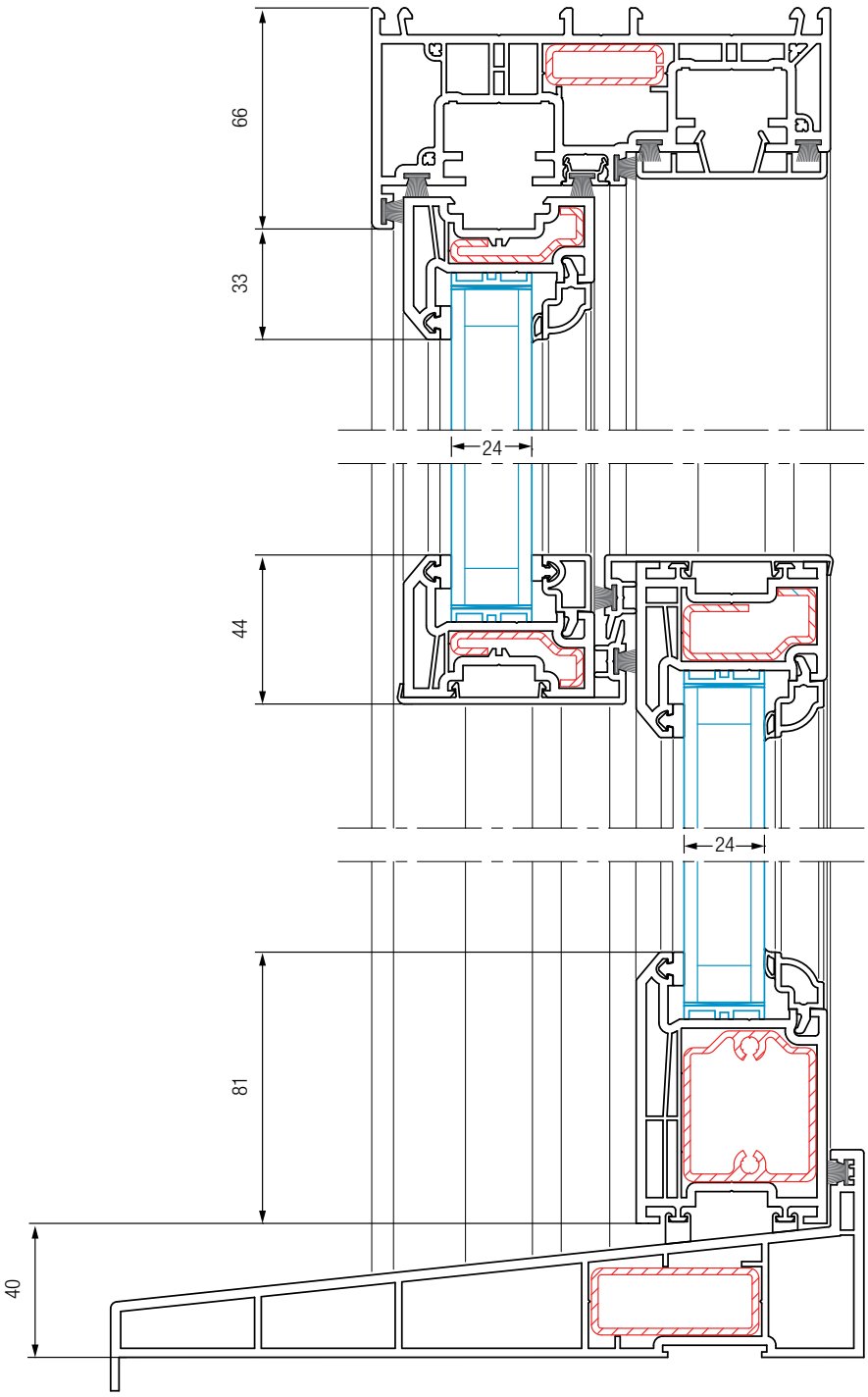

DETAILED DRAWINGS ARE AVAILABLE ON REQUEST

Top Sash

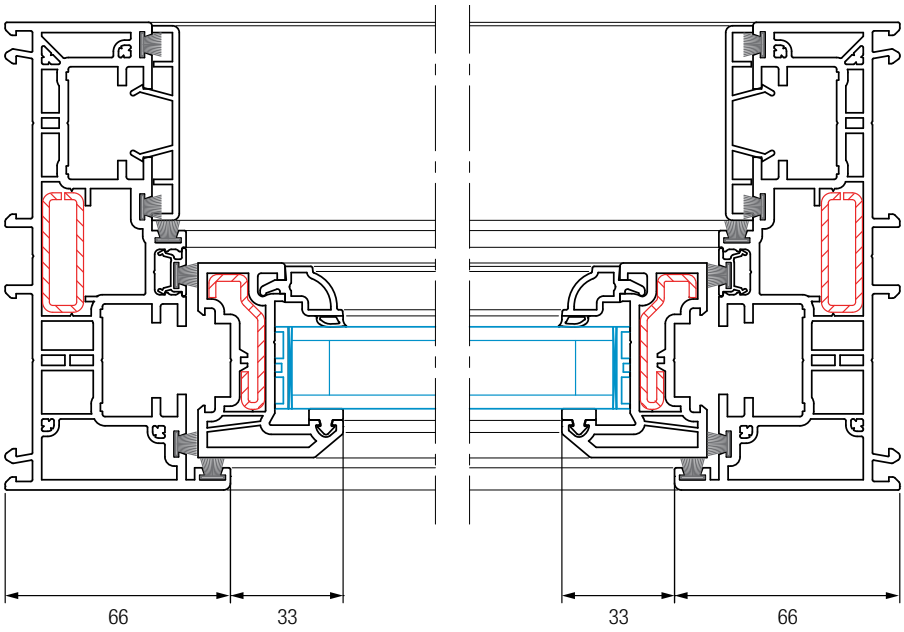

Bottom Sash

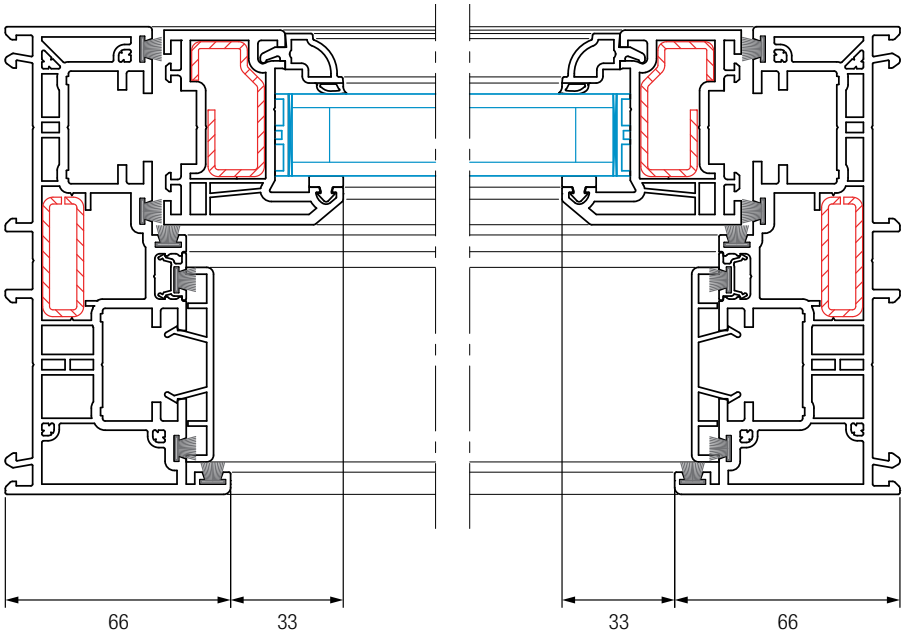

DETAILED DRAWINGS ARE AVAILABLE ON REQUEST

COMPOSITE DOORS
AGILA

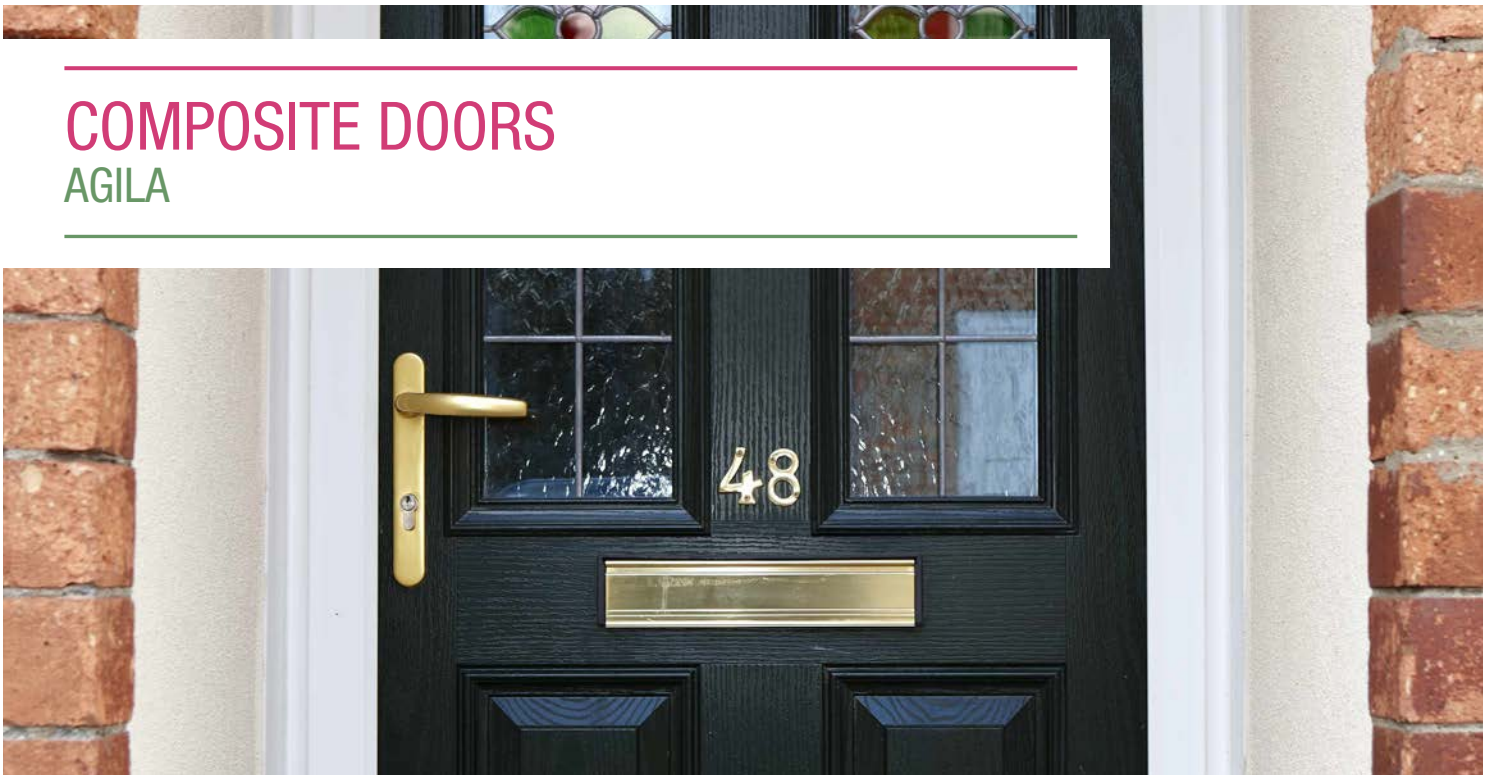

The REHAU AGILA Composite Door provides a range of versatile profiles allowing for a multitude of door combinations and styles. The classic chamfered design integrates the composite door seamlessly with the TOTAL70c window system.

Characteristics

PVC benefits such as durability, low maintenance and excellent thermal properties are included without compromising on the looks of a traditional wooden door.

Combining a dedicated 62mm outer frame and 70mm transom with the well-established trademark of TOTAL70c allows for fitting of standard 44mm composite door panels.

A slim transom, which can be welded or mechanically jointed replicating a traditional wooden frame, can be used for top lights.

A multi-function groove detail in the outer frame allows for both brush pile and standard REHAU glazing beads. The profile also integrates a double brush pile seal for clear drainage paths for internally and externally opening doors.

Composite doors are available in a range of foil laminate options allowing for complete personalised profile design. Our complete range of foil laminate options can be seen on our colour page or the REHAU Colour Brochure.

Durable, low maintenance and excellent thermal properties.

COMPOSITE DOORS
AGILA

1. Dedicated transom allows for top light glazing and greater flexibility
2. Opening vent option with coupling to TOTAL70
3. Slimmer sightlines enabling narrower door openings such as small cottage doors and older properties
4. Suitable for standard 44mm door slabs
5. Mechanical joint option available on transom
6. Dual brush pile seal for enhanced weather performance

Feature	Specification
Profile depth	70mm
Max. slab weight	100kg
Panel width	44mm
Further options	Dedicated low threshold options for Part M compliance Mechanical joint Dedicated frame and transom
Accreditations	See page 58

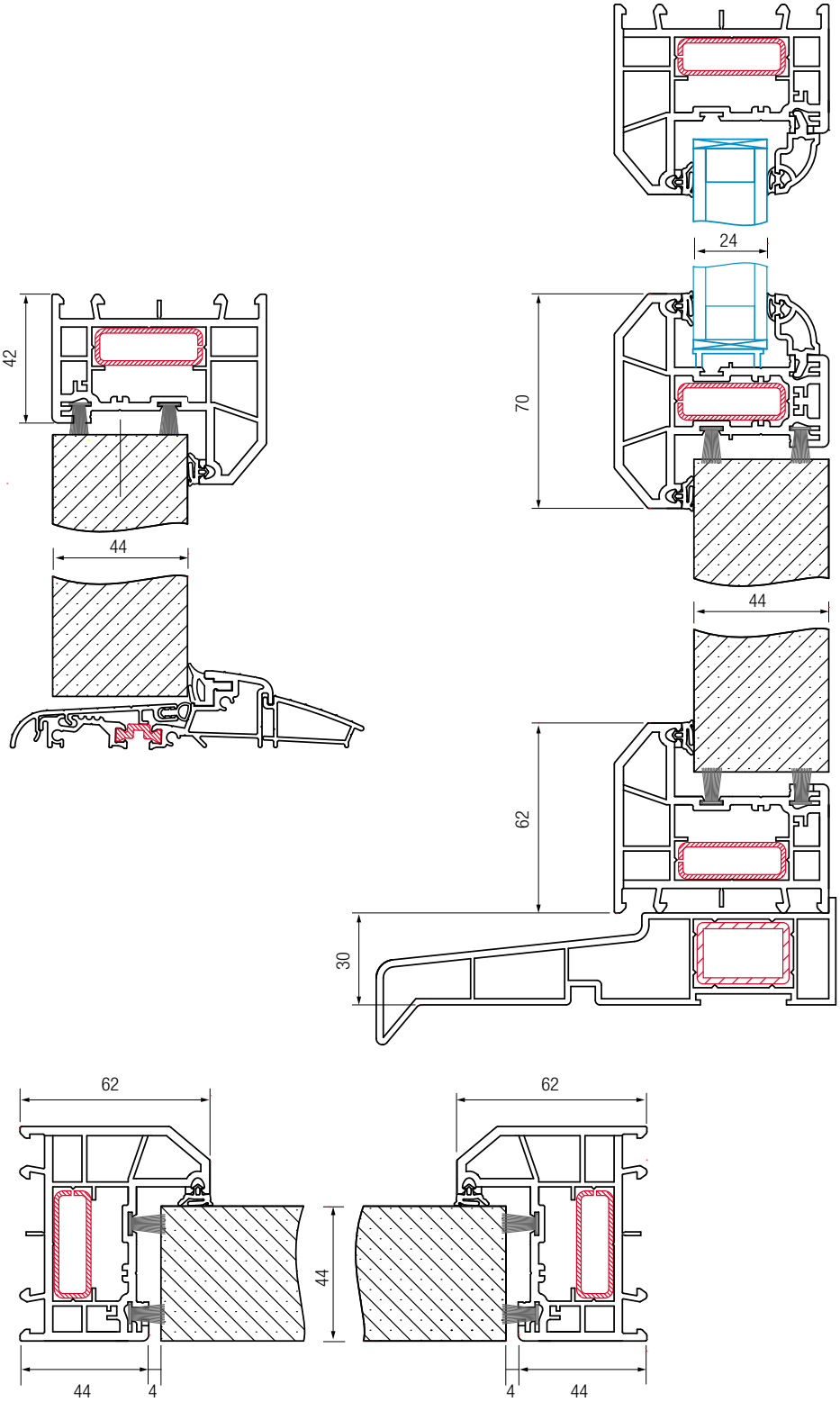

DETAILED DRAWINGS ARE AVAILABLE ON REQUEST

ENTRANCE DOORS
TOTAL70

Available in a wide range of colour options, REHAU Entrance Doors will meet all requirements, making them a natural choice for the specifier and trade markets, where they can be utilised in new build and refurbishment projects.

Characteristics

REHAU entrance doors comprise a range of multi-chambered profiles that are designed to meet the requirements of the new build, commercial and domestic refurbishment markets and allow for excellent thermal insulation.

With a choice of chamfered profiles using TOTAL70c or fully sculptured using TOTAL70s, there is a full range and has a full range of ancillary profiles for all installation requirements.

The 70mm door system allows the latest security hardware to be fitted and features pre-routed steel on locking side for continuous reinforcement.

Both designs are available in a range of foil laminate options allowing for complete personalised profile design. Our complete range of foil laminate options can be seen on our colour page or the REHAU Colour Brochure.

The 70mm door system allows the latest security hardware to be fitted, ensuring Part Q compliance of the building regulations.

127A

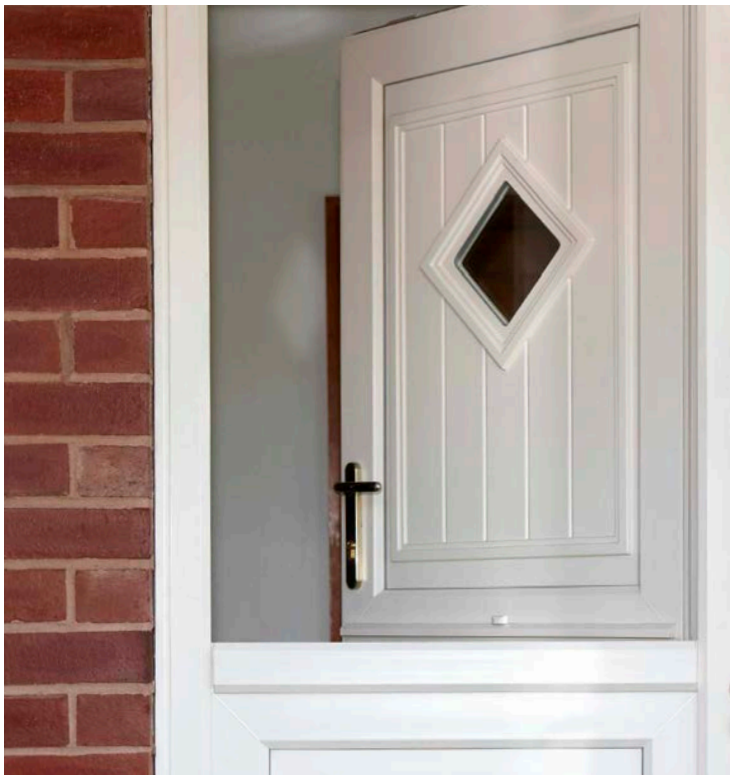

ENTRANCE DOORS
TOTAL70

1. Open-in and open-out styles available for a variety of installations
2. Can accommodate most standard locking mechanisms including high security bolt systems, flag and butt hinges
3. Pre-routed reinforcement on locking side ensures continuous reinforcement
4. Choice of chamfered or sculptured profiles available

Feature	Specification
Profile depth	70mm
Maximum size	1000 x 2200mm
Thermal performance	Exceeds 1.0 W/m²K
Max. sash weight	100kg
Glass width	4 – 44mm
Further options	Low threshold options for Part M compliance
Accreditations	See page 58

Residential door (in)

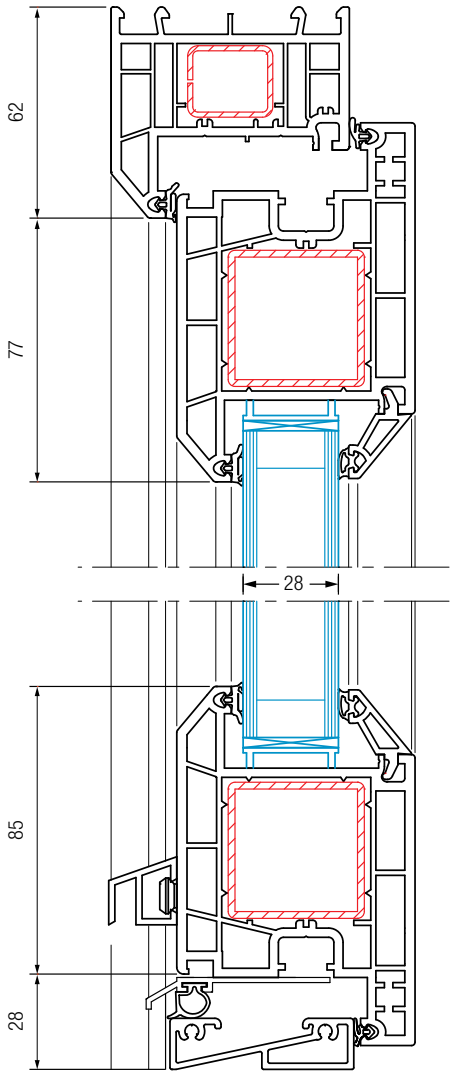

Residential door (out)

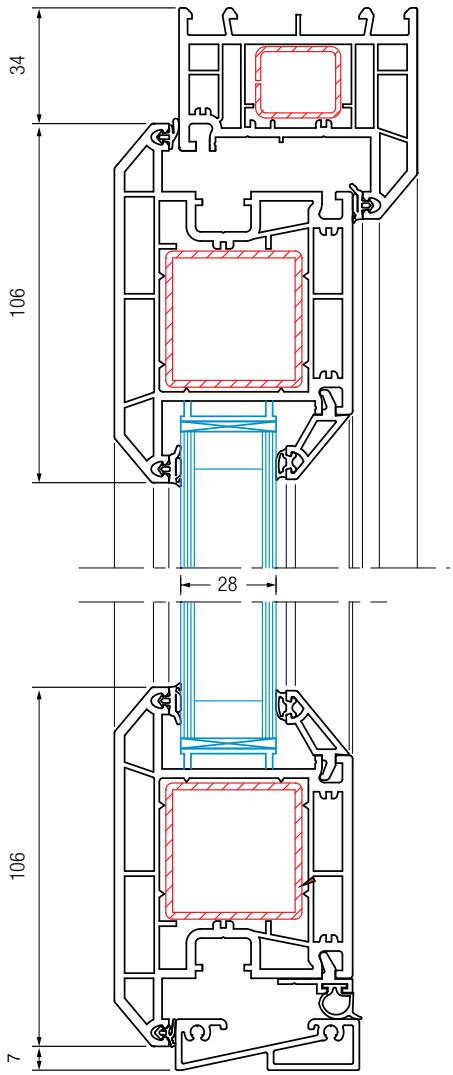

DETAILED DRAWINGS ARE AVAILABLE ON REQUEST

FRENCH DOORS
TOTAL70

REHAU offers a wide range of possibilities when a large opening is required to let the outside in. Our French Doors provide great aesthetics, durability and are energy efficient.

Characteristics

REHAU French doors comprise a range of multi-chambered profiles that are designed to meet the requirements of the new build, commercial and domestic refurbishment markets and allow for excellent thermal insulation.

Available in open-in and open-out styles, with equal or non-equal split panes, and with flag, butt or cranked hinges for an all-round design.

Dummy mullion allows for full aperture opening.

REHAU French doors must be fitted with safety glass, which meets the requirements of BS 6262.

French doors are available in a range of foil laminate options allowing for complete personalised profile design. Our complete range of foil laminate options can be seen on our colour page or the REHAU Colour Brochure.

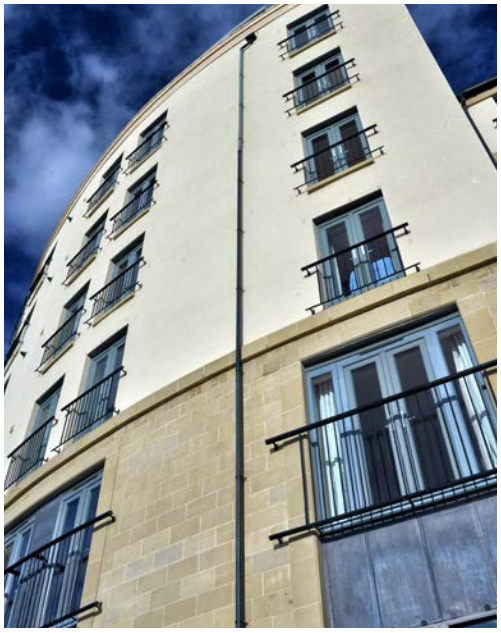

REHAU French Doors must be fitted with safety glass, which meets the requirements of BS 6262.

1 Dummy mullion allows for full aperture opening

2 Open-in and open-out styles available for increased versatility

3 Slim sightlines, perfectly suited to open up conservatories

Feature	Specification
Profile depth	70mm
Maximum size	1900 x 2200mm
Thermal performance	Exceeds 1.0 W/m²K
Max. sash weight	100kg
Glass width	4 – 44mm
Further options	Low threshold options for Part M compliance Decorative glass
Accreditations	BS7412 BS EN 12608 (BS7412) BSI KM 13358 PAS 24 BSI KM 66461 Fully building regulations compliant Allowing fabricators to obtain SBD accreditation

FRENCH DOORS
TOTAL70

French door (in)

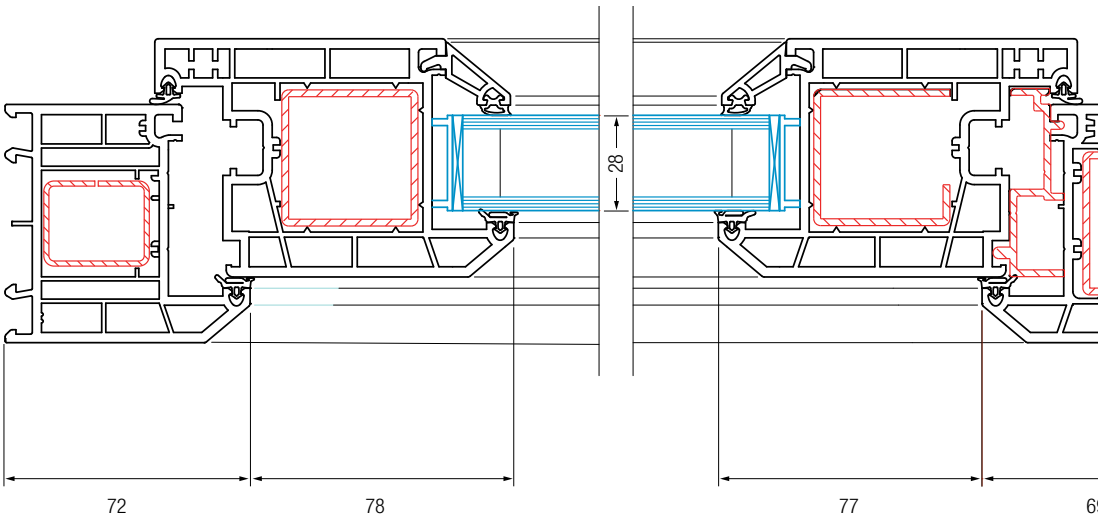

DETAILED DRAWINGS ARE AVAILABLE ON REQUEST

French door (out)

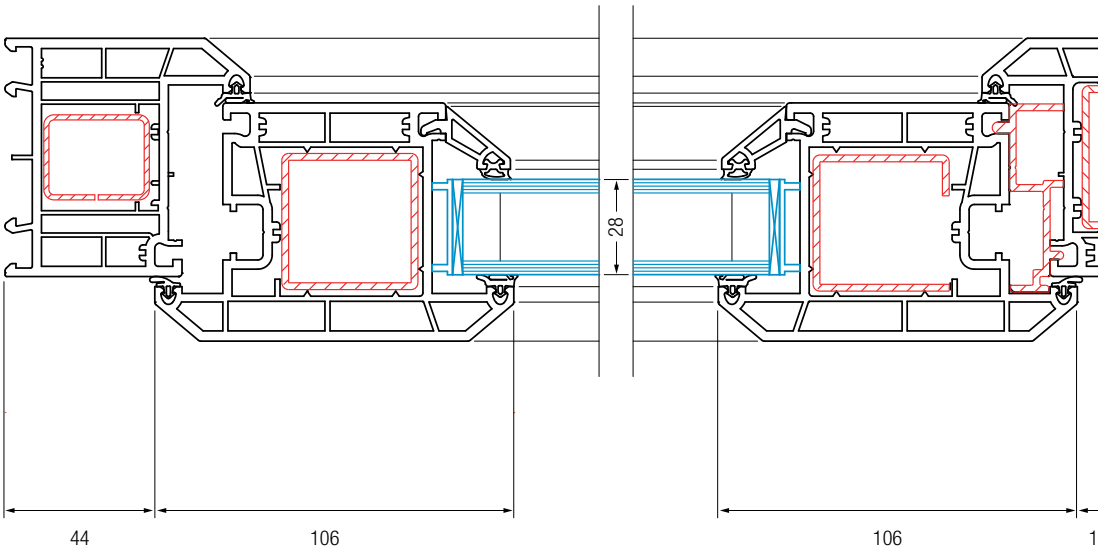

DETAILED DRAWINGS ARE AVAILABLE ON REQUEST

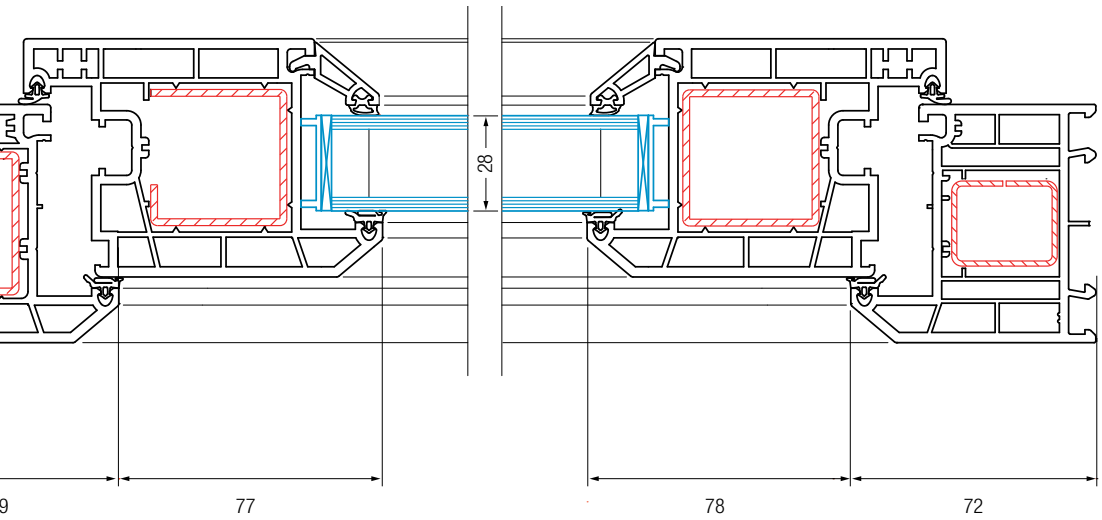
28
9
77
78
72

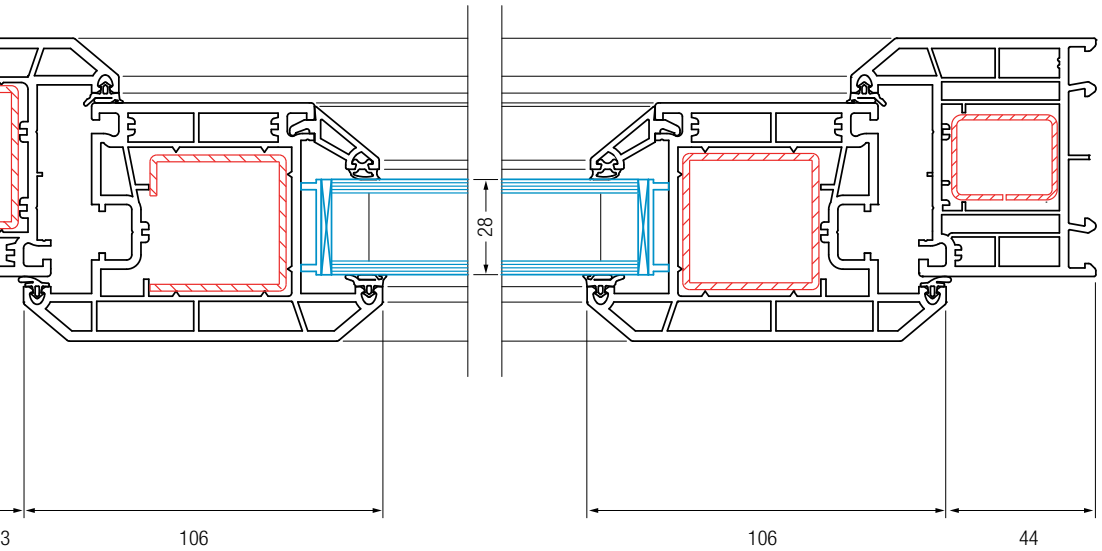
28
3
106
106
44

SLIDING DOORS
AGILA

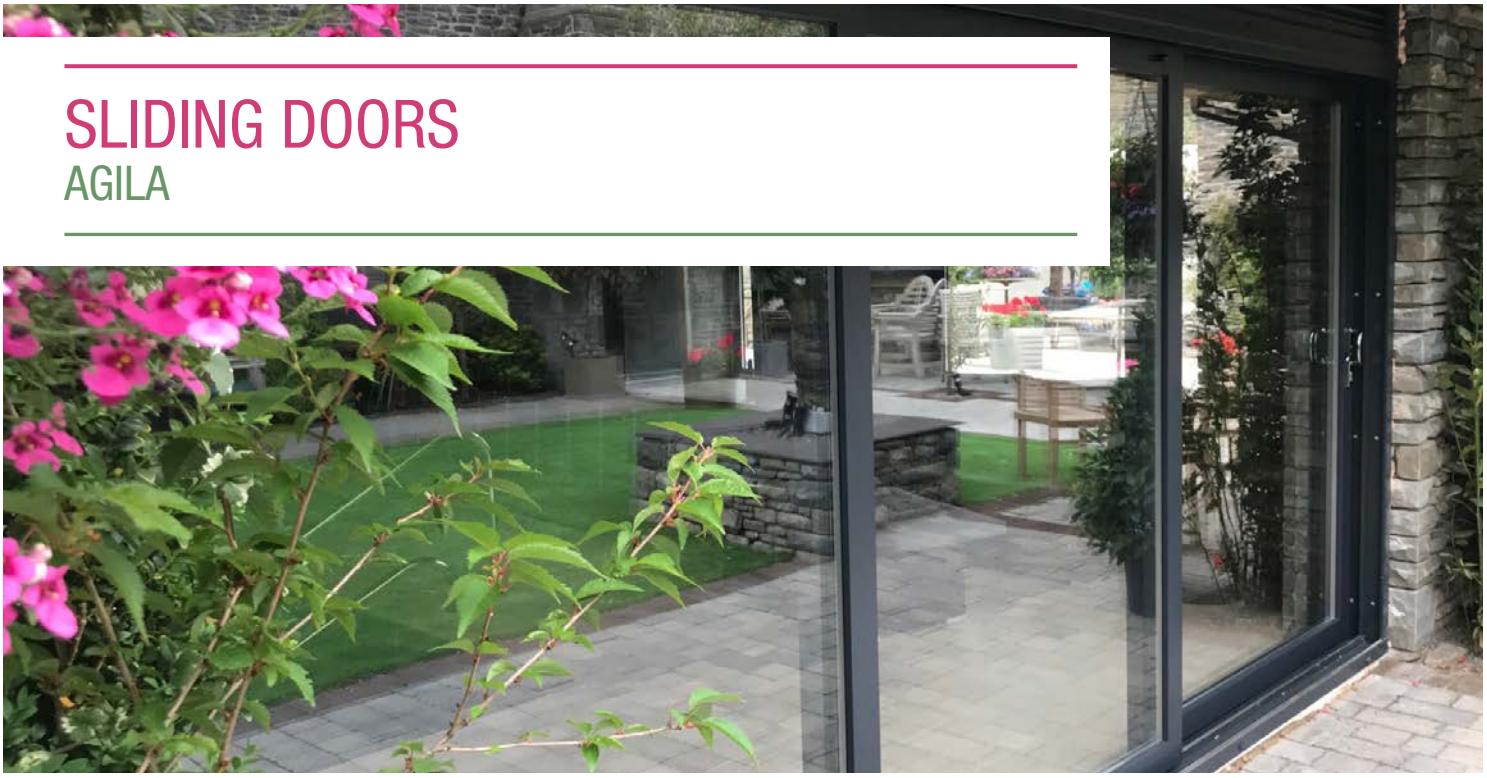

AGILA sliding doors are perfect for modern living, combining superior design and engineering to bring outstanding versatility and create a feeling of openness in any home. Versatile and good-looking, the sliding door offers slim sightlines, adding light and freedom.

Characteristics

The AGILA sliding door provides a variety of styles, maximising glazing and viewing areas whilst also maintaining versatility and an expansive range of sizes.

A number of opening styles from two panes up to six and with a maximum opening width of 5m and heights of up to 2.4m are achievable with the AGILA sliding door. Two panes allow for a maximum opening of 50% and the triple track frame with a three-pane slider allows for a maximum opening of 75%. The further option of a range of foil laminate options allows for a personalised design solution.

Although the AGILA sliding door has been designed with structural integrity in the forefront, this does not take away its excellent thermal performance.

With standard argon filled, double glazed units, the AGILA sliding door can easily achieve a Door Energy Rating of `A`. To go further, the glazing units can be improved, as the AGILA sliding door will accommodate up to 36mm triple glazed units for the maximum possible thermal performance.

REHAU offers a complete solution with bespoke branded hardware including handles, rollers and locking mechanisms with up to 12 point locking and additional corner hooks for advanced security and Part Q of the building regulations compliance.

Large steel section reinforcements allow for larger size doorsets.

The AGILA sliding door can easily achieve a Door Energy Rating of `A´.

1. Large choice of panel configurations from two sashes up to six with the triple track creating a cinematic door
2. 12 point locking mechanism for enhanced security to achieve PAS 24
3. Triple track maximum width of 5m
4. Practical and versatile
5. Increased door sizes and slim sightlines allow more light as there are less vertical breaks in your visual area
6. Opening from either the left, right or even from the centre for complete flexibility

Feature	Specification
Profile depth	86mm/160mm
Maximum size	Up to 5m x 2.4m (dependent on configuration)
Thermal performance	1.4 W/m²k
Max. sash weight	100kg per door using 3 wheel roller 160kg per door using 5 wheel roller
Glass width	4 – 36mm
Accreditations	BS EN 12608 (BS7412) BSI KM 13358 PAS 24 BSI KM 66461 Fully building regulations compliant to part Q Allowing fabricators to obtain SBD accreditation
Further options	Mechanical joint for larger sizes and ease of manouverability

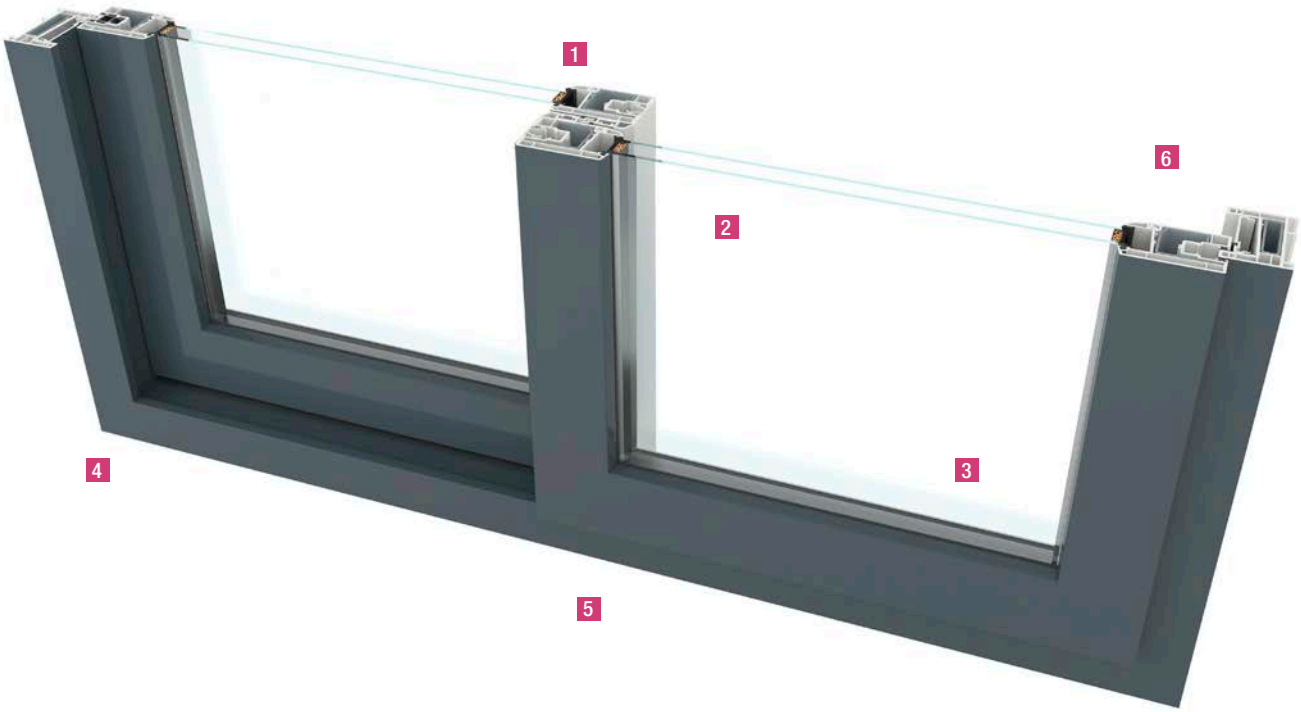

SLIDING DOORS
AGILA

AGILA patio 2 track

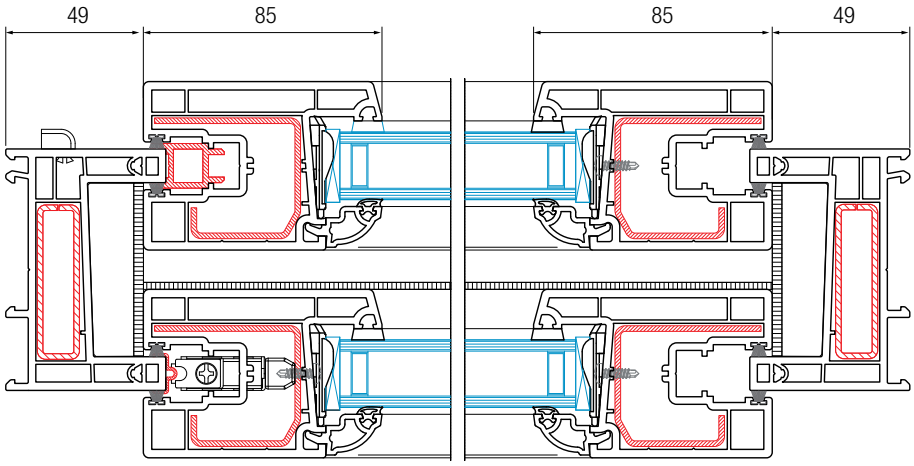

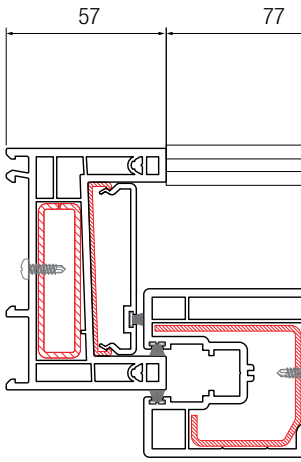

DETAILED DRAWINGS ARE AVAILABLE ON REQUEST

AGILA patio 3 track

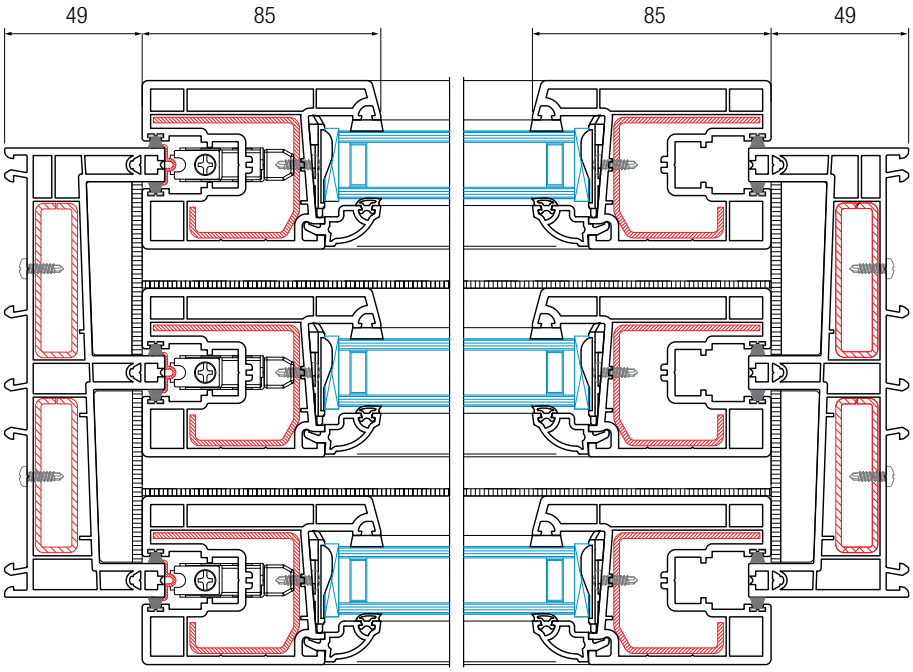

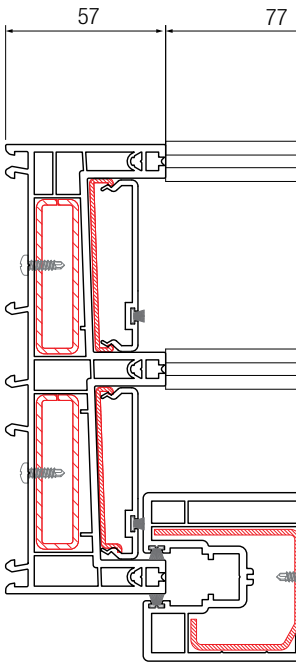

DETAILED DRAWINGS ARE AVAILABLE ON REQUEST

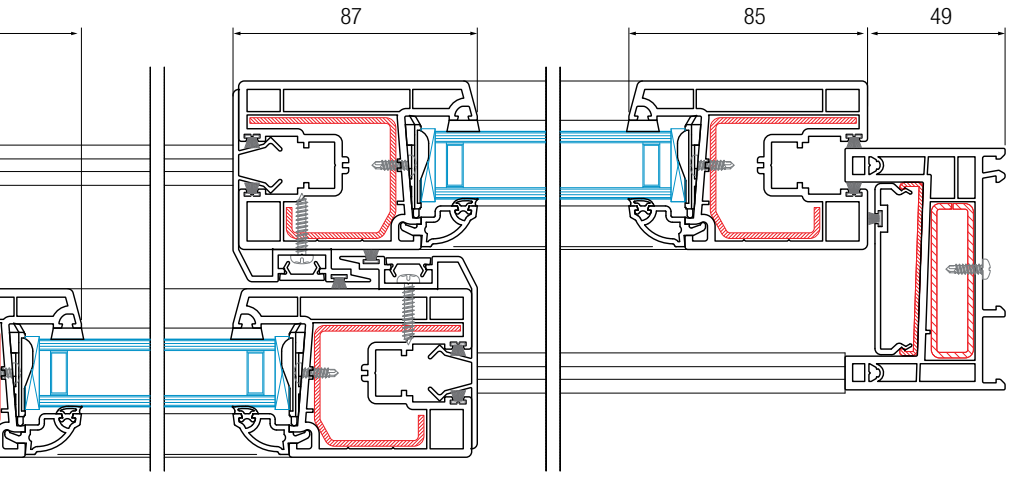
87
85
49

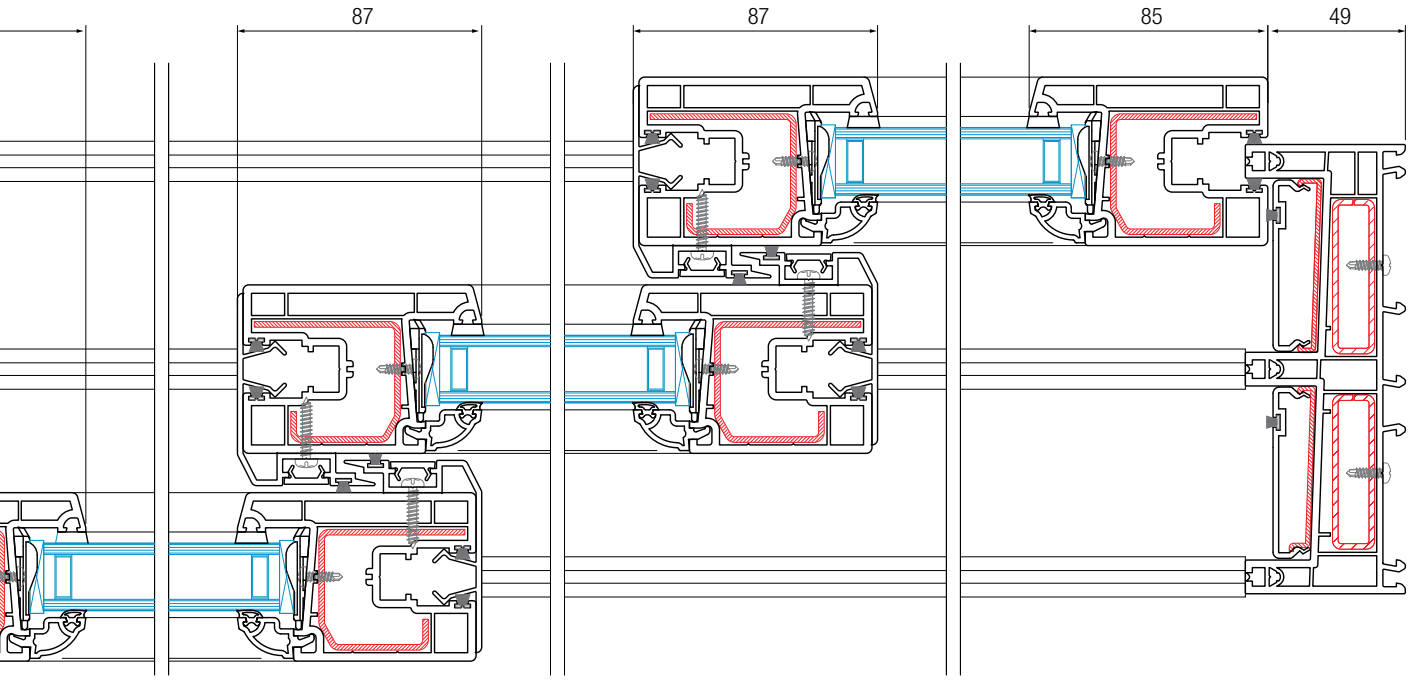
87
87
85
49

MULTI-FOLD DOORS
AGILA

A popular alternative to more traditional PVC French doors and PVC sliding doors, the AGILA Multi-Fold Door can create an open plan feel for any type of building. The multifaceted panes of the multi-fold door fold back to allow a wide opening offering unrestricted access and bringing the outside in.

Characteristics

The AGILA multi-fold door offers an extensive range of styles and combinations. There is something to suit the widest variety of door apertures with a choice of up to seven opening sashes. The flexibility of the design means that the doors can open from left, right or centre allowing maximum versatility.

With a choice of two outer frames, three chamber 72mm or five chamber 76mm, the door can be produced in a range of styles and configurations.

Slim sightlines allow for more light inside and an enhanced view. A dedicated low threshold running track with clip-on sill is available to integrate a thermally broken low threshold, reducing heat loss and lessening the chance of condensation gathering on the inside.

A reversible track detail allows for the choice of opening inwards or outwards. The integrated track detail sits directly onto the brickwork to reduce movement in the roller mechanism; meaning less chance of the door rollers needing to be adjusted over time.

A coarse brush pile has been designed to minimise dirt ingress allowing smoother roller action.

Multi-fold doors are available in a range of foil laminate options allowing for complete personalised profile design. Our complete range of foil laminate options can be seen on our colour page or the REHAU Colour Brochure.

Slim sightlines allow for more light inside and an enhanced view.

MULTI-FOLD DOORS
AGILA

1. Multifaceted panes fold back to allow the widest aperture, offering unrestricted access and maximum viewing
2. Dedicated low threshold allows for a reversible open-in / open-out configuration
3. Possibility of up to seven panes and various style configurations
4. Master door can be located on the right or left side, offering total flexibility

Feature	Specification
Profile depth	70mm
Maximum size	2300 x 4000mm (White) 2200 x 3000mm (Coloured/Foiled)
Thermal performance	1.4 W/m^{2}k
Max. sash weight	80kg
Glass width	4 – 44mm
Accreditations	See page 58

Vertical Section

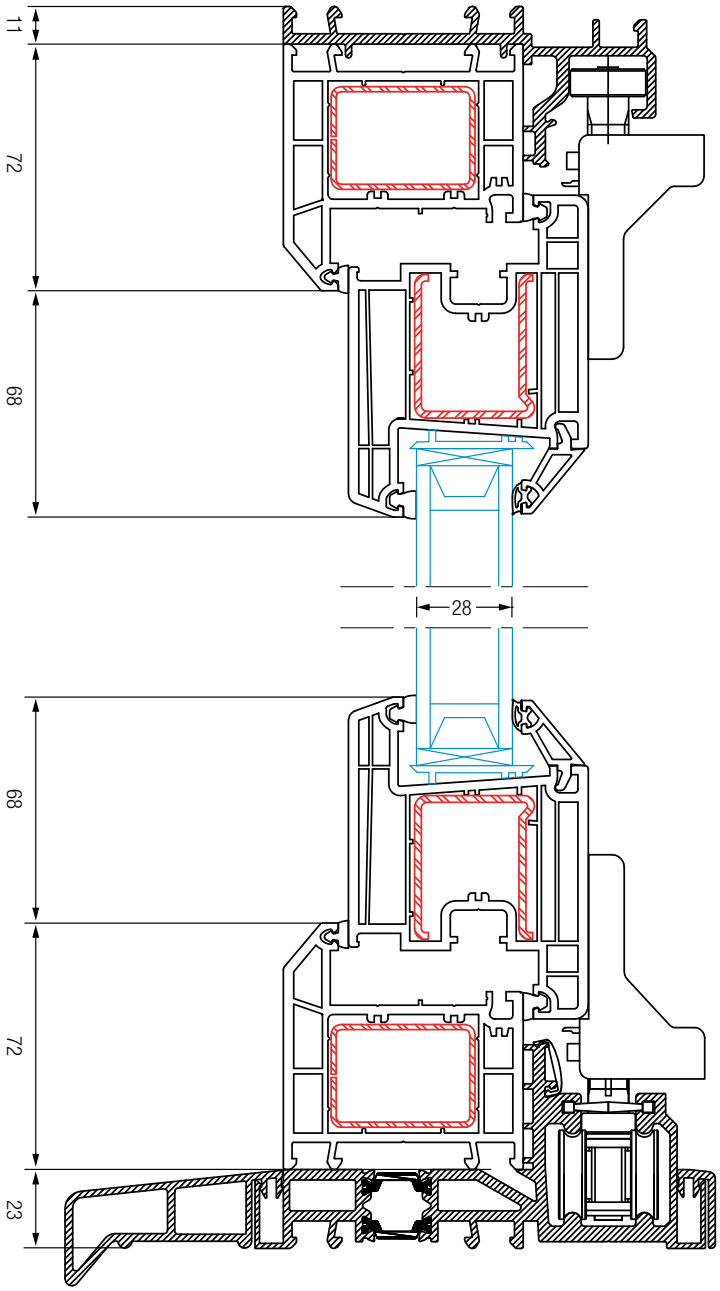

DETAILED DRAWINGS ARE AVAILABLE ON REQUEST

ALU CLAD CURTAIN WALLING

Polytec 50

Polytec 50 is a Curtain Walling System which is suitable for both new build and replacements, vertical or inclined curtain walling and single or multi-storey buildings.

As a warm facades (thermally broken) stick system, the REHAU Polytec 50 curtain walling system has been engineered to give you complete architectural freedom with efficient on-site assembly.

Curtain wall attributes

Externally Polytec 50 has aluminium cover caps in various style and colour options to help you create stunning glazed facades. Unlike most curtain wall systems, however, Polytec has a steel core which has much greater strength than aluminium and a PVCu inner face, providing warmth and low maintenance.

With exceptional weather performance Polytec 50 confidently passed the stringent CWCT tests whilst also being certified by the Passivhaus Institute for excellent thermal performance with a Ucw value of up to 0.8 W/m^{2}K.

Appearance

Choose your exterior aluminium cap style from traditional to modern in any RAL colour from Anthracite Grey to Magenta to make your building individual and aesthetically stylish. Polytec 50 also has slim and attractive 50mm sightlines and can be designed for convex or concave faceted applications.

Strength of steel

Polytec 50's core is made of steel box sections from 50 x 40mm to 120 x 40mm up to 5mm thick. As steel has an E-modulus three times greater than aluminium, Polytec 50's structural capabilities outperform aluminium sections with the same geometry, making it ideal for large spans.

Insulation

Polytec 50 has been designed with thermal efficiency as a priority and has been certified by the Passivhaus Institute as an A rated product. With a Ucw value of 0.8 W/m^{2}K, it will keep the heat in during the winter and out during the summer.

Glazing

The system is designed to work with glazing units or panels from 6 - 40mm with a maximum glazing weight of 180kg. Polytec 50s is designed to accept all REHAU window styles as "inserts" to achieve ventilation openings.

Polytec 50 passed the stringent CWCT tests.

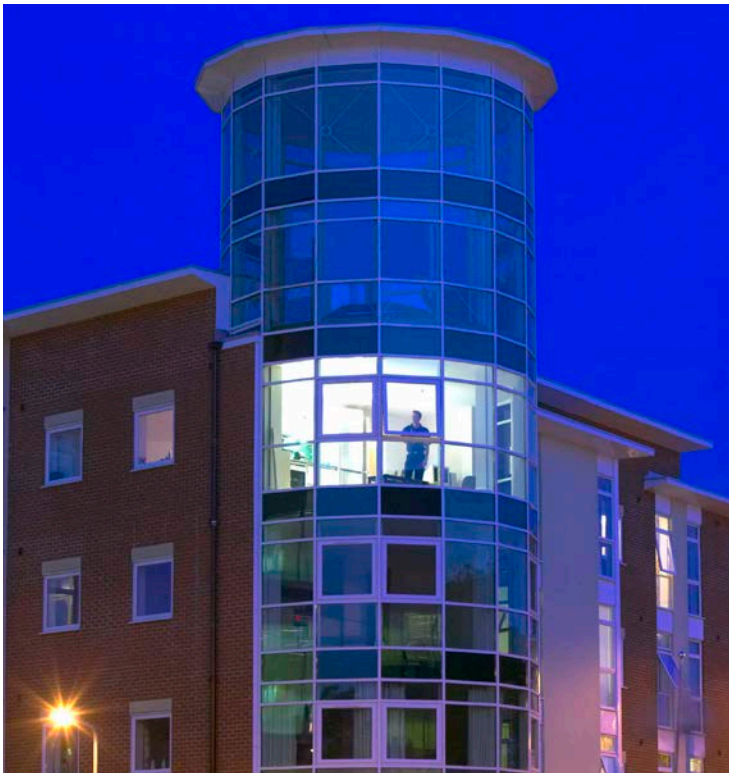

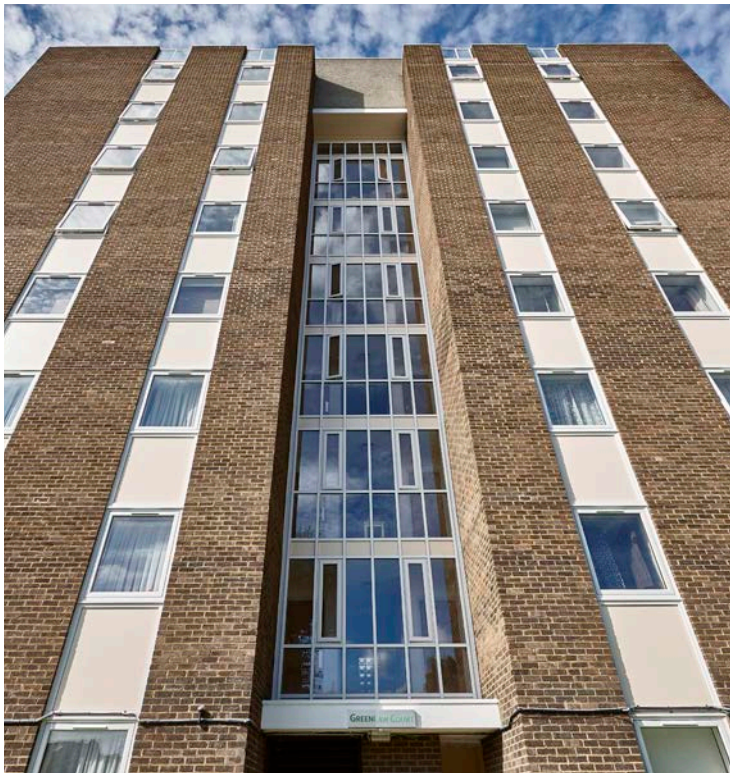

Maximum sizes
Maximum mullion and transom sizes, span and dimensions depend on design loads. Project specific calculations need to be carried out. Please contact one of our Commercial Managers or our Regional Sales Offices for assistance.

Weather performance
High weather performance because of mullion drained and pressure equalised system design.

Colour
Large range of colour options with powder coated aluminium cover profiles for the exterior and Acryl II painted for the interior.

Tried and trusted
Polytec 50 has been installed throughout Europe on low-rise and high-rise buildings in many different types of topography / locations. The system has been tested according to EN 13830.

CWCT Approved
Polytec 50 has been tested to the stringent CWCT (Centre for Window Cladding Technology) weather performance standards, confidently passing all areas.

ALU CLAD CURTAIN WALLING
Polytec 50

1. CWCT Compliant for max. weather performance
2. Steel core for strength
3. Composite stick system
4. U-value of 0.8 W/m²K
5. 43dB sound rating
6. Slim sightlines

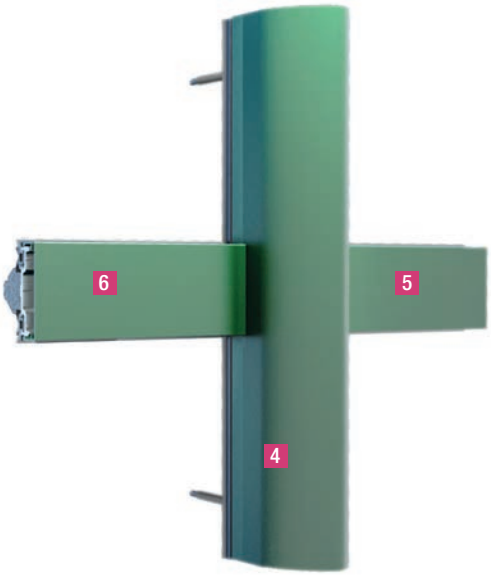

Feature	Rating
Sightlines	50mm
Range of profile depth	71 – 134mm (internal profile depth)
Range of glazing	Size 6 – 40mm
Max. glazing weight	180kg
Thermal performance	Uf up to 0.74 W/m²K (Passivhaus specification)

IFT Rosenheim testing:	
Water tightness	1950 Pa (BS EN 12155)
Air permeability	750 Pa (BS EN 12153)
Wind resistance	2000 Pa (BS EN 12179)
Safety test	3000 Pa (EN 13116)
Impact resistance	Pass I5 / E5 (EN 14019)
Sound insulation	Rw = 43dB (depending on glass spec.)

Colour options:	
External	Powder coating (RAL colours) or Mill / Anodised finish
Internal	PVCu White RAL 9016 or painting in REHAU Acryl II wide range of colours (REHAU Colour chart)

CWCT (Centre for Window Cladding Technology)	
	Polytec 50 Tested (2014) to CWCT Test Methods for Building Envelopes (December 2005) Sections 5,6,7,9,11,12 and 15 for Weather and Impact performance Subsequent compliance with NHBC Chapter 6.9

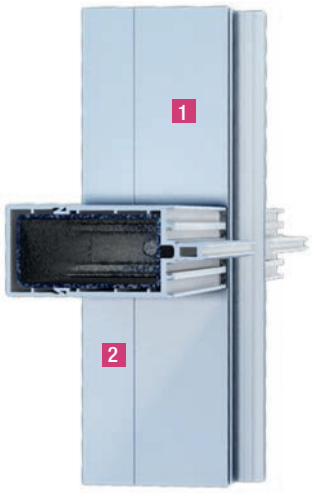

3

Vertical Section

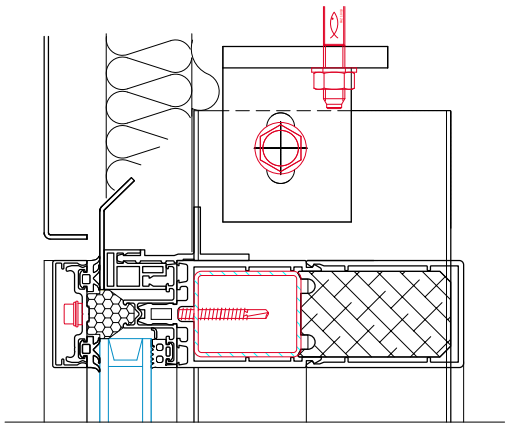

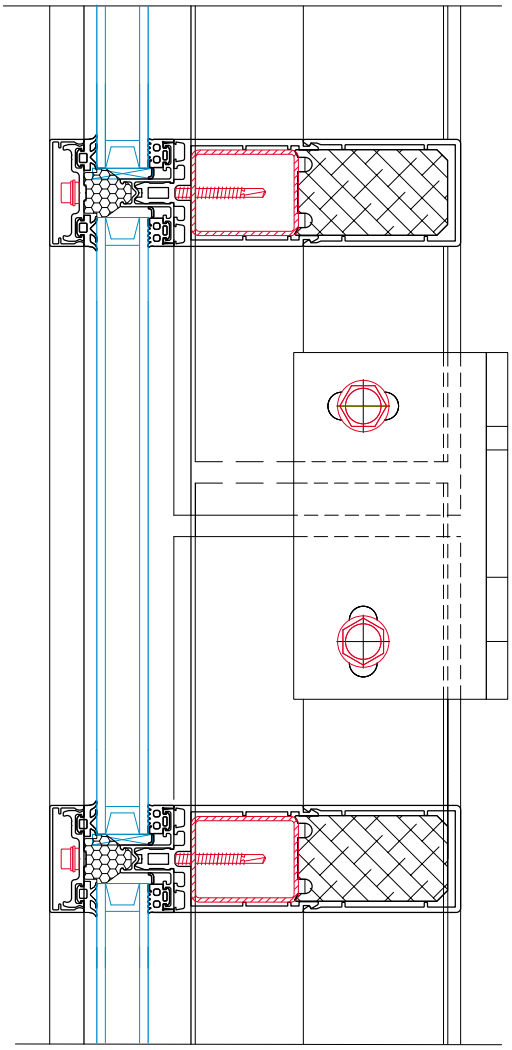

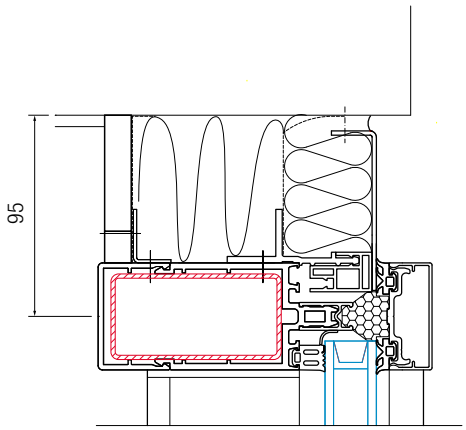

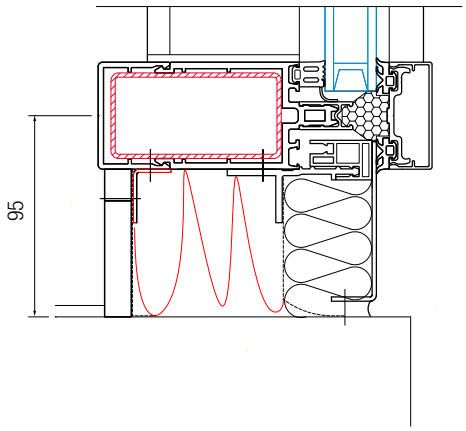

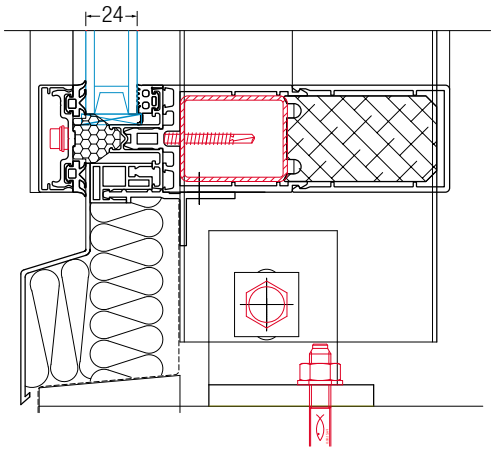

DETAILED DRAWINGS ARE AVAILABLE ON REQUEST

COLOUR
From timeless hues to statement shades

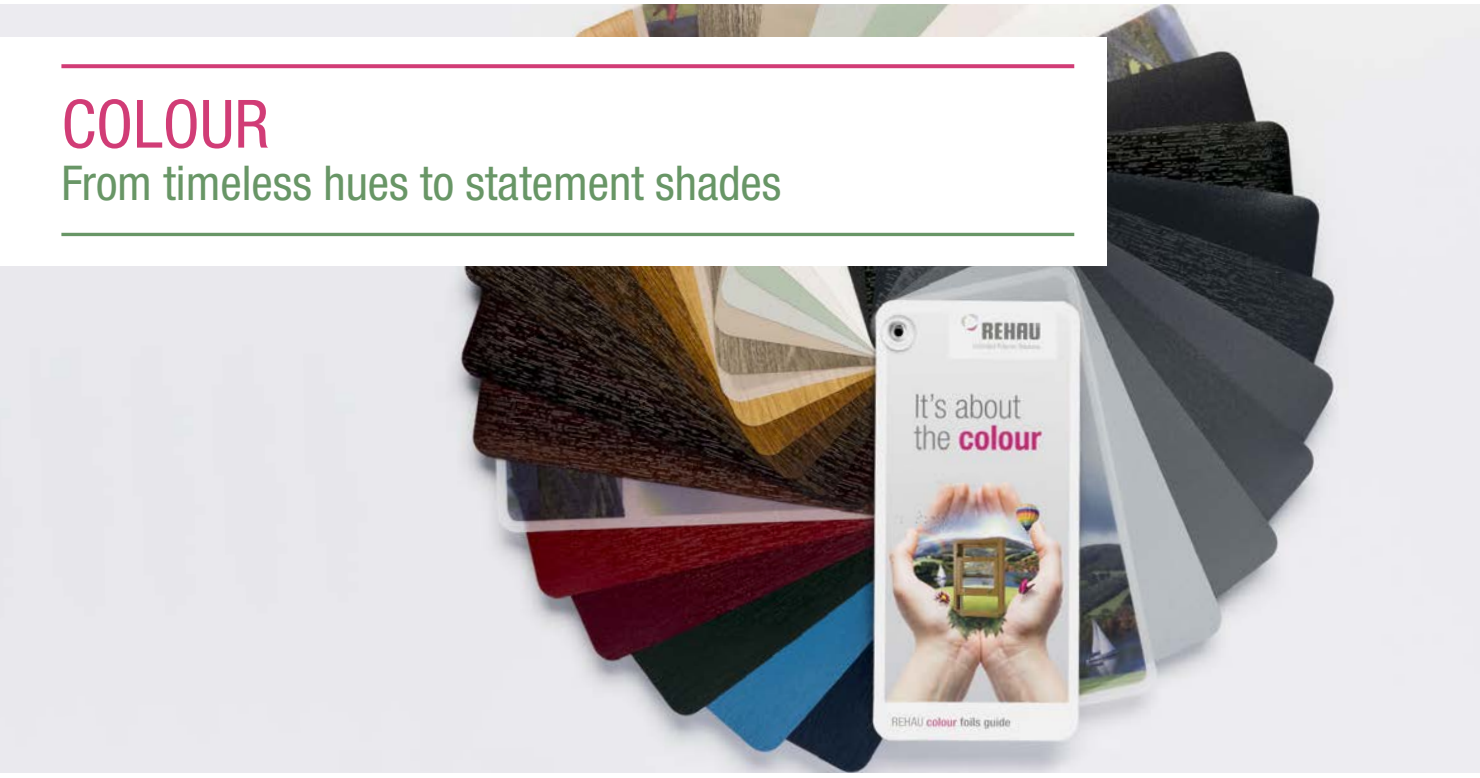

Our four collections offer a rich array of colours that meet the aesthetic desires of architects and the distinctive ideas of each and every homeowner.

Twenty-six solid and woodgrain laminate finishes are available from timeless hues in Clotted Cream and Chartwell Green to contemporary expressions in different shades of grey and statement colours like Ruby Red.

All foil finishes provide high performance in different weather conditions without colour deterioration or fade. PVCu windows and doors are now not only a sensible and sustainable solution, but they're also a source of inspiration and an expression of colourful desires!

Explore the colour collections below...

The Contemporary Collection

Elephant Grey
(Grained)

Metallic Grey
(Smooth) *Exclusive to commercial installers*

Basalt Grey II
(Smooth)

Slate Grey
(Grained)

Slate Grey
(Smooth)

Anthracite Grey
(Grained)

Anthracite Grey
(Smooth)

Midnight Black
(Matt)

Black Brown
(Grained)

The Timeless Collection

Simply White
(Grained)

Clotted Cream
(Grained)

Chartwell Green
(Grained)

Pearl Grey
(Grained)

The Traditional Collection

Irish Oak
(Grained)

Turner Oak
(Grained)

woodec

Golden Oak
(Grained)

Walnut
(Grained)

Dark Oak
(Grained)

Rosewood
(Grained)

Mahogany
(Grained)

The Statement Collection

Ruby Red
(Grained)

Racing Green
(Grained)

Steel Blue
(Grained)

ACCREDITATIONS

	Manufacturing Control Certification	Extrusion & Product Certification
REHAU Ltd	**ISO 9001** Quality Management System	**BSI KM 13358** - BS EN 12608 (BS7412) Class A
	ISO 50001 Energy Management	**BSI KM 66461** - PAS 24 Doors Enhanced Security
	ISO 14001 Environmental Management	**BSI KM 76189** - PAS 24 Windows Enhanced Security
	VinylPlus Product Label – Certification of Approval	

	Fabrication Certification	Legal Requirement
FABRICATOR REQUIREMENTS	**BS 7412 (BS 6375)** Fabrication & Performance (EN)	Building Regulations Compliant including: Part L (Thermal Efficiency, Enhance Security ADQ)
	PAS 24 Doors - Enhanced Security	CE Marking - BS EN 14351_1 Window & Doors Product Standard
	PAS 24 Windows - Enhanced Security	Factory Production Control (FPC)

	Fabrication Certification	Scope of Compliance
ROUTE TO COMPLIANCE	Cascading of REHAU testing only →	Building Regulations
	Cascading of REHAU testing & 3rd Party Certification L →	Building Regulations plus can be used to gain further approval and certification including: • Secure By Design (SBD) • Kitemark Licence (BSI), Q Mark (Exova), BBA etc.
	Independent UKAS testing →	

Certified
Profile and windows/doors

Legal Requirements
Met for fabrication

Further Compliance
Capable i.e. SBD, WER etc.

BS EN12608:2016
Unplasticized Polyvinylchloride (PVC-U) profiles for the fabrication of windows and doors - Classification, requirements and test methods.
REHAU Kitemark Licence Number: **KM13358**. Standard for **BSI approved** profiles extruded in 1406 material by REHAU Ltd.
All classes to be tested in accordance with standard requirements with **critical** criteria as set out below:

MATERIAL INFORMATION	**4.2 (5.8)** Classification of climatic zones	Two climatic zones available: M (moderate) and S (severe) **REHAU profiles extruded achieve Classification SEVERE**
	4.3 (5.6) Classification of resistance to impact by falling mass of main profile	For the resistance to impact by falling mass at -10°C two classes are available: **Class I** falling mass of 1000g at a height of 1000mm **Class II** falling mass of 1000g at a height of 1500mm **REHAU profiles extruded achieve Classification II**
	4.4 (5.3.2) Classification of wall thickness of main profiles	There are three classification thicknesses available: A, B and C (as per table 3 EN12608). **REHAU profiles extruded achieve Classification A**

BUILDING SOLUTIONS

Reliable. Innovative. Secure.

REHAU Building Solutions think and act with a view to future generations. We offer building products such as hygienic plumbing systems, heating systems and pre-insulated pipe for heat networks and energy centres that help you leave your legacy for generations to come.

RAUPIANO Plus: Acoustic soil and waste solution

A complete solution from family homes to large commercial buildings.

- Acoustic soil and waste system
- 17dB noise protection performance
- Full range from DN32-200
- High chemical resistance from polypropylene (PP)
- 2 bar rated push-fit system
- 30% faster installation than alternative systems
- 120 minute fire protection

RAUTITAN: For water and heat

The universal system for drinking water and heating.

- 10 bar WRAS-approved heating and plumbing system
- RAUTITAN Flex (PE-Xa) and Stabil (aluminium multilayer)
- REHAU EVERLOC™ compression sleeve fitting has been used over 750,000,000 times
- Independent certification of a 'cavity-free' joint
- Over 50 year lifespan
- Proven alternative to copper

Thermally activated building structures (TABS)

- Low investment and operating costs
- "Gentle cooling" without draft effects
- Reduced air exchange in combination with ventilation systems
- No Sick Building Syndrome
- Use of alternative energy sources
- Low flow temperatures mean efficient performance of alternative energy sources

REHAU Chilled ceiling

Reduces noise and dust allergens for a healthier working environment. Up to 20% lower energy consumption.

- No servicing and maintenance costs
- No draughts or dust allergens therefore reducing Sick Building Syndrome
- Uses REHAU EVERLOC™ jointing technology
- No compromise on planned ceiling height

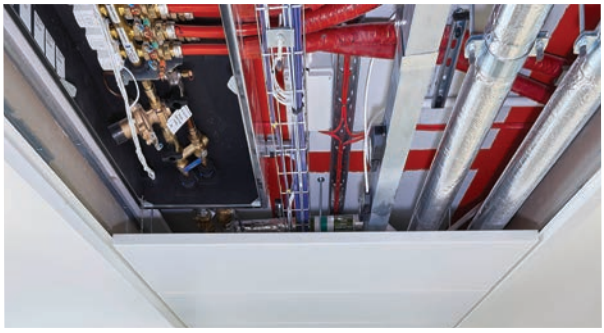

Heat networks & energy centres

In the drive to reduce carbon emissions from heating, many new residential and mixed use developments are connecting to a district heat network or installing remote energy centres on site. Possible heat sources include gas CHP or renewable energy sources such as heat pumps or biomass.

IT'S MADE IN THE U.K.

REHAU district heating pipes:

- RAUVITHERM and RAUTHERMEX PE-Xa pipes available from 25-160mm
- PP-R pipes available up to 355mm
- Uses REHAU EVERLOC™ compression sleeve joining technology
- Largest UK stock of pre-insulated pipes with full cutting service
- RAUVITHERM is the only PE-Xa pipe made in the UK

PLASTICS IN CIRCULATION
Resource conservation at REHAU

As a manufacturer, we are conscious of the impact of our actions on people and the environment.

The use of recycled materials is one of REHAU's strategic objectives. Our highly developed refurbishment concepts have enabled us to conserve resources and minimise waste disposal and material residues for many years now.

We just have to look at the increasingly stringent legal requirements and growing demand for sustainable construction products to know that we are on the right track. We are aiming to gradually increase the proportion of recycled materials in our products.

Previously, window profiles were primarily made via the mono-extrusion method and used virgin PVC. Co-extrusion (i.e. multi-layer extrusion) adds a second extruder to the operation that processes a second material and combines the best characteristics of both materials. If recycled material is used in the process, the advantages are clear; the return concept keeps valuable raw materials in the production cycle and thus makes it possible to re-use materials in similar product applications even after their initial product life cycle.

Co-extrusion is an innovative method of producing top-quality window profiles, enabling different PVC materials to be processed on the core of the profile and the outer skin.

What quality standards do our co-extrusion products meet and comply with?
Quality is the key. Using this process, the window profiles retain their outstanding characteristics, creating a unique combination of first-rate quality, innovation and sustainability.

The use of recycled material means that valuable secondary raw materials can be re-used, which helps to protect the environment. This enables us to combine our responsibility to act sustainably with our commitment to offer our customers the best range of products – and thus enable them to act more sustainably themselves.

The core materials we primarily use are:
- Regrind material generated via our own extrusion and lamination processes (post-industrial waste)
- Window production regrind material from our processors (post-industrial waste)
- Materials that we extract from returned windows (post-consumer waste)

We have many years of experience in the use of co-extrusion technology. For example, the GENEO and NEFERIA profile systems employ it in order to utilise the high-tech fibre composite RAU-FIPRO as a means of enhancing stability. Co-extrusion is being implemented at all company locations and within TOTAL70 products.

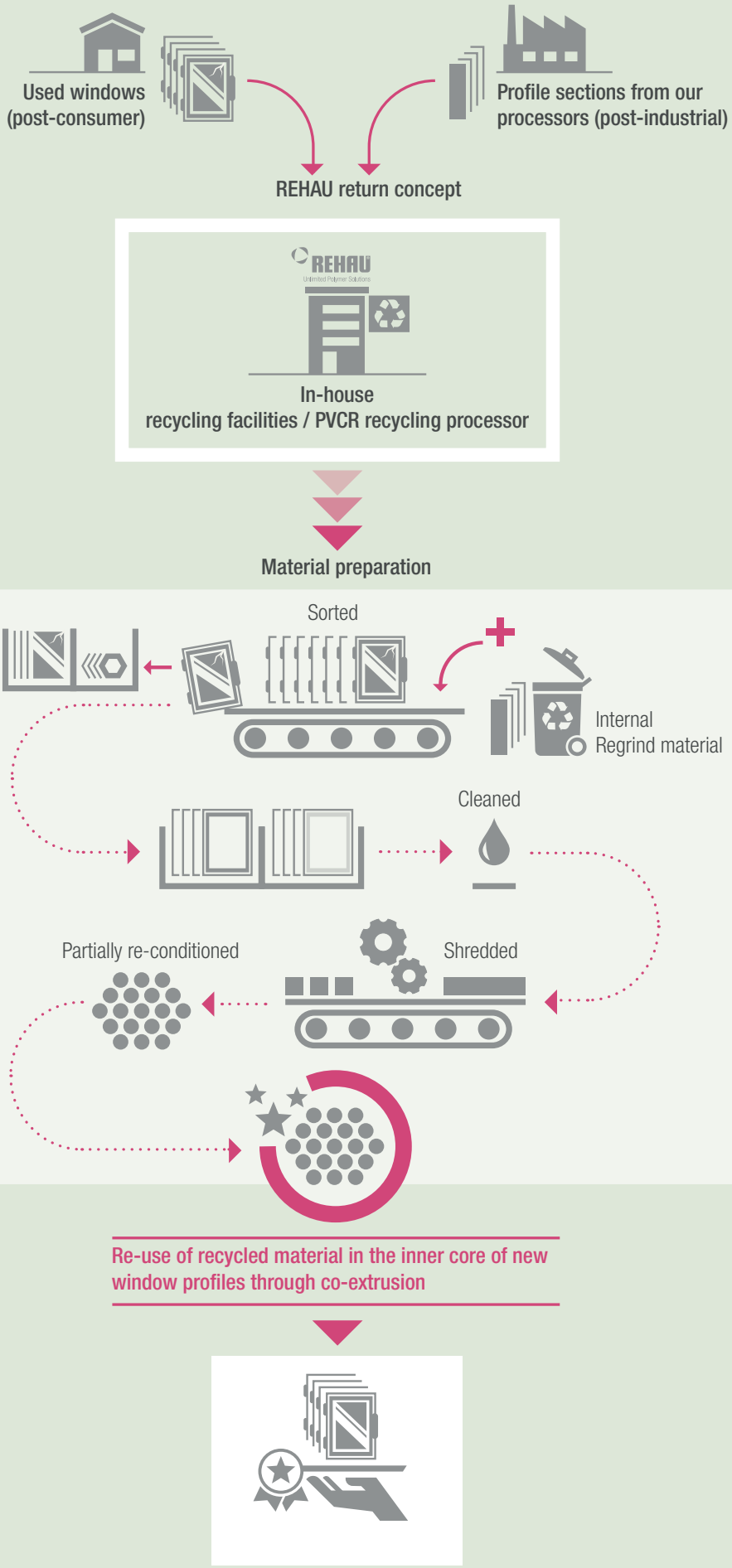
Used windows
(post-consumer)
Profile sections from our
processors (post-industrial)
REHAU return concept
REHAU
In-house
recycling facilities / PVCR recycling processor
Material preparation
Sorted
Internal
Regrind material
Cleaned
Partially re-conditioned
Shredded
Re-use of recycled material in the inner core of new
window profiles through co-extrusion

SUSTAINABILITY
Reducing our impact

We bear particular responsibility towards our customers and partners as well as our employees, but also towards the environment and society.

Polymer solutions are our core business and the base from which we want to evolve – to become the innovative technology leader that offers real value to customers and end users. While we use 70 per cent of our resources for ongoing projects in the core business, we use 20 per cent to agilely find new solutions – even without a customer order. We devote the last 10 per cent of our capacities to innovations that could replace tried and tested methods and products in the future.

We think holistically, act sustainably and invest in the future. In this way, we can use new solutions to increase added value, conserve resources and thus make a contribution to society. With our REHAU 2020 initiative we are already shaping our contribution to the future.

Dr. Stefan Girschik,
Deputy CEO of the REHAU Group, Manager of the Sustainability Committee

The implementation of our strategy goals 2020

By 2020, we want to save 30% electricity. In 2016, we were already at

16.8 %

compared to 2009.

We want to reduce our water consumption by 40% by 2020. In 2016 we already saved

30.5 %

compared to 2009.

We have already achieved one goal in 2016: we reduced our CO_2 emissions by

26.5 %

Our Values

Reliability
Innovative materials, new environmental certificates and clever system solutions – REHAU strides reliably with its customers into the future.

Innovation
Home-made innovation
At REHAU, it is particularly the employees who come up with innovations. They independently make driving a car more environmentally friendly or continuously increase the proportion of resource-conserving recyclates in window profiles.

Trust
Trust is everything
Every good and long-term relationship is based on trust. Employees, partners and customers should know that REHAU is there for them and takes responsibility.

Our sustainability committee has developed a mission statement that clearly defines our activities for sustainable management. We can systematically classify all targets and measures into four areas.

Our actions are determined by four core topics

1. Long-term corporate strategy:
Sustainability determines our actions and is an integral part of the REHAU 2020 strategy. We bear responsibility towards employees, customers, the environment and society.

2. Environmentally friendly, energy-efficient products
We create sustainable products along the entire value chain. Our goal is to use all materials to create products and solutions that are durable and low-maintenance, and that stand out for their exceptional quality and energy efficiency. In this way, REHAU has been promoting qualified recycling concepts and expanding them further for many years.

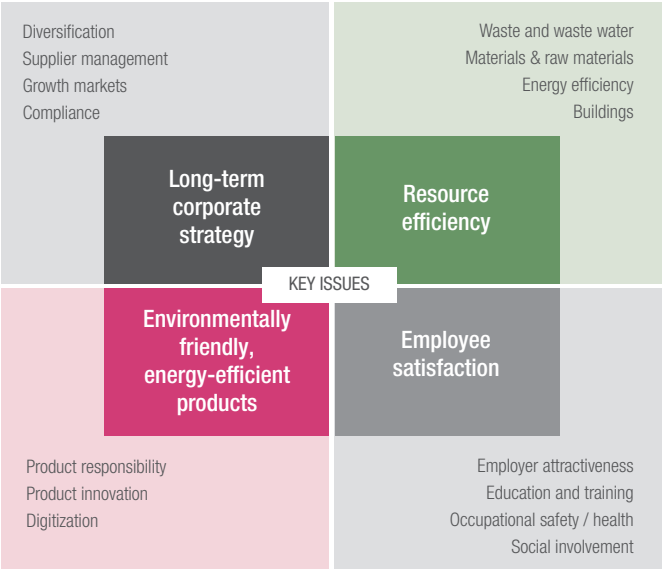

Based on the four core topics, we can define concrete sustainability targets and find concrete approaches and solutions to achieve these.

3. Resource conservation:
REHAU has extensive experience in protecting resources. For example, we work so energy-efficiently that our German locations are now all certified to the ISO standard 50001 for efficient energy management. The standard defines the development of systematic energy management in the company. An energy management system records our energy consumption, shows potential savings and helps us improve our energy efficiency.

4. Employee satisfaction:
REHAU stands for an employee-friendly personnel policy. We provide a flexible and productive work environment, nurture talent and help to achieve career goals. We invest selectively in new and digital continuing education programs that employees can choose independently.

DISCOVER KNOWLEDGE
REHAU CPD

We are dedicated to providing our customers with the most up-to-date training available. We offer a number of CPD's, product training and design workshops, which can all be booked via the REHAU Hub.

Acoustic soil and waste

Aluminium clad curtain walling

13 courses to choose from to enhance your professional career

Creating energy efficient workspaces

Innovative uses of cable trunking

Book a CPD today

www.rehau.uk/cpds

Introduction to chilled ceiling comfort cooling

District heating & heat networks

Fenestration

Polymer pipe for heating & plumbing

Polypropylene sewer pipe & chambers

Ground-air heat exchanger

Ground-source energy & special applications

Renewable heat technologies

Introduction to sub-surface heating & cooling

DISCOVER THE REHAU HUB

Education, innovation and support

The REHAU Hub provides education, training and sales services for our customers and industry partners. By offering a proactive specification function, we promote awareness of REHAU's building products and solutions.

Services we offer

- Project specifications – concept meetings with clients, technical specifications developed
- Project specific Technical Submittals
- Concept designs including output calculations
- Full project proposals and tenders
- After sales support & site visits
- On-site training (tooling & install)
- CPD seminars

DISCOVER
the REHAU Hub

DISCOVER

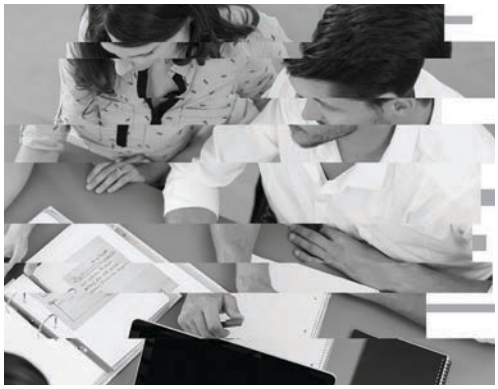

DISCOVER KNOWLEDGE

We are dedicated to providing our customers with the most up-to-date training available. We offer CPD, product training and design workshops, which can all be booked via the REHAU Hub.

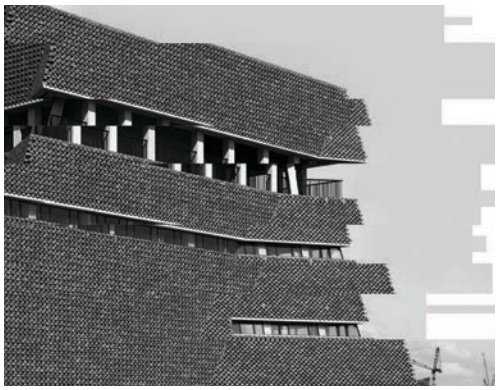

DISCOVER INSPIRATION

Be inspired by world-class prestigious projects throughout the UK. Here you can view a selection of projects we have worked on. With tangible case studies, we can demonstrate our ability to help you realise your goals.

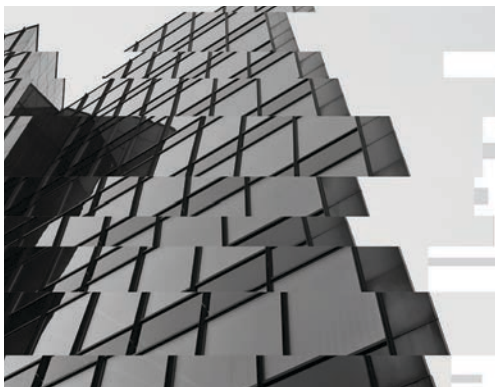

DISCOVER INNOVATION

REHAU are at the forefront of design and innovation and pride themselves on their energy efficient products, all of which can be viewed at the REHAU Hub.

DISCOVER SUPPORT

SUPPORT – We offer full on-site and off-site support for your project, through our network of window fabricators, authorised partners, and our technical support team.

Get in touch...

For further information
visit www.rehau.uk/windows
email enquiries@rehau.com

@REHAU Windows @REHAU.UK @REHAULtd @REHAU-UK-Ltd @REHAU_UK

REHAU Ltd, Hill Court, Walford, Ross-on-Wye, Herefordshire, HR9 5QN Tel: 01989 762 600

Our verbal and written application engineering advice is based upon experience and the best of our knowledge. However, it is to be regarded as non-binding information. Working conditions and use under conditions for which the product was not intended and over which we have no influence exclude any claim resulting from our information.
We recommend that a check is made as to whether the REHAU product is suitable for the envisaged purpose. Application, use and processing of the products is carried out beyond the scope of our control and is therefore carried out exclusively at your own responsibility. If liability should still apply, then this is restricted, in the case of all damage, the value of the goods supplied by us and used by you.
Our warranty applies to the consistent quality of our products as per our specification and in accordance with our general terms and conditions of delivery and payment.
This document is protected by copyright. All rights based on this are reserved. No part of this publication may be translated, reproduced or transmitted in any form or by any similar means, electronic or mechanical, photocopying, recording or otherwise, or stored in a data retrieval system.

06.2019

Get in touch...

Steve Tonkiss

Commercial Sales Manager

Tel 01753 588 515

Mob 07802 580 249

Email steve.tonkiss@rehau.com

Visit www.rehau.uk/windows

@REHAU Windows @REHAU.UK @REHAULtd @REHAU-UK-Ltd @REHAU_UK

REHAU Ltd, Slough Sales Office, Units 5 J&K Langley Business Centre, Station Road, Langley, SL3 8DS

Our verbal and written application engineering advice is based upon experience and the best of our knowledge. However, it is to be regarded as non-binding information. Working conditions and use under conditions for which the product was not intended and over which we have no influence exclude any claim resulting from our information.
We recommend that a check is made as to whether the REHAU product is suitable for the envisaged purpose. Application, use and processing of the products is carried out beyond the scope of our control and is therefore carried out exclusively at your own responsibility. If liability should still apply, then this is restricted, in the case of all damage, the value of the goods supplied by us and used by you.
Our warranty applies to the consistent quality of our products as per our specification and in accordance with our general terms and conditions of delivery and payment.
This document is protected by copyright. All rights based on this are reserved. No part of this publication may be translated, reproduced or transmitted in any form or by any similar means, electronic or mechanical, photocopying, recording or otherwise, or stored in a data retrieval system.

06.2019

Get in touch...

Kevin O'Neill
Commercial Sales Manager

Tel 01753 588 505
Mob 07736 148 709
Email kevin.oneill1@rehau.com
visit www.rehau.uk/windows

@REHAU Windows @REHAU.UK @REHAULtd @REHAU-UK-Ltd @REHAU_UK

REHAU Ltd, Slough Sales Office, Units 5 J&K Langley Business Centre, Station Road, Langley, SL3 8DS

Our verbal and written application engineering advice is based upon experience and the best of our knowledge. However, it is to be regarded as non-binding information. Working conditions and use under conditions for which the product was not intended and over which we have no influence exclude any claim resulting from our information.
We recommend that a check is made as to whether the REHAU product is suitable for the envisaged purpose. Application, use and processing of the products is carried out beyond the scope of our control and is therefore carried out exclusively at your own responsibility. If liability should still apply, then this is restricted, in the case of all damage, the value of the goods supplied by us and used by you.
Our warranty applies to the consistent quality of our products as per our specification and in accordance with our general terms and conditions of delivery and payment.
This document is protected by copyright. All rights based on this are reserved. No part of this publication may be translated, reproduced or transmitted in any form or by any similar means, electronic or mechanical, photocopying, recording or otherwise, or stored in a data retrieval system.

06.2019

Get in touch...

Samsara McDonald
Commercial Sales Manager

Tel 01698 503 719
Mob 07802 580 245
Email samsara.mcdonald@rehau.com
visit www.rehau.uk/windows

@REHAU Windows @REHAU.UK @REHAULtd @REHAU-UK-Ltd @REHAU_UK

REHAU Ltd, Phoenix House, Strathclyde Business Park, Phoenix Cres, Bellshill, ML4 3NJ

Our verbal and written application engineering advice is based upon experience and the best of our knowledge. However, it is to be regarded as non-binding information. Working conditions and use under conditions for which the product was not intended and over which we have no influence exclude any claim resulting from our information.
We recommend that a check is made as to whether the REHAU product is suitable for the envisaged purpose. Application, use and processing of the products is carried out beyond the scope of our control and is therefore carried out exclusively at your own responsibility. If liability should still apply, then this is restricted, in the case of all damage, the value of the goods supplied by us and used by you.
Our warranty applies to the consistent quality of our products as per our specification and in accordance with our general terms and conditions of delivery and payment.
This document is protected by copyright. All rights based on this are reserved. No part of this publication may be translated, reproduced or transmitted in any form or by any similar means, electronic or mechanical, photocopying, recording or otherwise, or stored in a data retrieval system.

06.2019

Get in touch...

Declan Coulter

Divisional Sales Manager - Windows Division

Tel +353 1 8165025

Mob +353 872051946

Email declan.coulter@rehau.com

visit www.rehau.uk/windows

@REHAU Windows @REHAU.UK @REHAULtd @REHAU-UK-Ltd @REHAU_UK

REHAU Ltd, 9 Saint John's Court Office Park, Swords Road, Santry, Dublin 9

Our verbal and written application engineering advice is based upon experience and the best of our knowledge. However, it is to be regarded as non-binding information. Working conditions and use under conditions for which the product was not intended and over which we have no influence exclude any claim resulting from our information.
We recommend that a check is made as to whether the REHAU product is suitable for the envisaged purpose. Application, use and processing of the products is carried out beyond the scope of our control and is therefore carried out exclusively at your own responsibility. If liability should still apply, then this is restricted, in the case of all damage, the value of the goods supplied by us and used by you.
Our warranty applies to the consistent quality of our products as per our specification and in accordance with our general terms and conditions of delivery and payment.
This document is protected by copyright. All rights based on this are reserved. No part of this publication may be translated, reproduced or transmitted in any form or by any similar means, electronic or mechanical, photocopying, recording or otherwise, or stored in a data retrieval system.

06.2019

Get in touch...

Nicola Clark

Area Sales Manager - Windows Division

Tel 0161 7777 427

Mob 07740 301464

Email nicola.clark@rehau.com

visit www.rehau.uk/windows

@REHAU Windows @REHAU.UK @REHAULtd @REHAU-UK-Ltd @REHAU_UK

REHAU Ltd, Brinell Drive, Irlam, Manchester, M44 5BL

Our verbal and written application engineering advice is based upon experience and the best of our knowledge. However, it is to be regarded as non-binding information. Working conditions and use under conditions for which the product was not intended and over which we have no influence exclude any claim resulting from our information.
We recommend that a check is made as to whether the REHAU product is suitable for the envisaged purpose. Application, use and processing of the products is carried out beyond the scope of our control and is therefore carried out exclusively at your own responsibility. If liability should still apply, then this is restricted, in the case of all damage, the value of the goods supplied by us and used by you.
Our warranty applies to the consistent quality of our products as per our specification and in accordance with our general terms and conditions of delivery and payment.
This document is protected by copyright. All rights based on this are reserved. No part of this publication may be translated, reproduced or transmitted in any form or by any similar means, electronic or mechanical, photocopying, recording or otherwise, or stored in a data retrieval system.

06.2019

Get in touch...

Steve Tonkiss
Commercial Sales Manager

Tel 01753 588 515
Mob 07802 580 249
Email steve.tonkiss@rehau.com
Visit www.rehau.uk/windowss

REHAU Ltd, Slough Sales Office,
Units 5 J&K Langley Business Centre,
Station Road, Langley, SL3 8DS

Kevin O'Neill
Commercial Sales Manager

Tel 01753 588 505
Mob 07736 148 709
Email kevin.oneill1@rehau.com
visit www.rehau.uk/windowss

REHAU Ltd, Slough Sales Office,
Units 5 J&K Langley Business Centre,
Station Road, Langley, SL3 8DS

Samsara McDonald
Commercial Sales Manager

Tel 01698 503 719
Mob 07802 580 245
Email samsara.mcdonald@rehau.com
visit www.rehau.uk/windows

REHAU Ltd, Phoenix House, Strathclyde
Business Park, Phoenix Cres,
Bellshill, ML4 3NJ

Declan Coulter
Divisional Sales Manager
- Windows Division

Tel +353 1 8165025
Mob +353 872051946
Email declan.coulter@rehau.com
visit www.rehau.uk/windowss

REHAU Ltd, 9 Saint John's Court
Office Park, Swords Road, Santry,
Dublin 9

Nicola Clark
Area Sales Manager
- Windows Division

Tel 0161 7777 427
Mob 07740 301464
Email nicola.clark@rehau.com
visit www.rehau.uk/windows

REHAU Ltd, Brinell Drive, Irlam,
Manchester, M44 5BL

@REHAU Windows @REHAU.UK @REHAULtd @REHAU-UK-Ltd @REHAU_UK

Our verbal and written application engineering advice is based upon experience and the best of our knowledge. However, it is to be regarded as non-binding information. Working conditions and use under conditions for which the product was not intended and over which we have no influence exclude any claim resulting from our information.
We recommend that a check is made as to whether the REHAU product is suitable for the envisaged purpose. Application, use and processing of the products is carried out beyond the scope of our control and is therefore carried out exclusively at your own responsibility. If liability should still apply, then this is restricted, in the case of all damage, the value of the goods supplied by us and used by you.
Our warranty applies to the consistent quality of our products as per our specification and in accordance with our general terms and conditions of delivery and payment.
This document is protected by copyright. All rights based on this are reserved. No part of this publication may be translated, reproduced or transmitted in any form or by any similar means, electronic or mechanical, photocopying, recording or otherwise, or stored in a data retrieval system.

06.2019